Chipsmall Limited consists of a professional team with an average of over 10 year of expertise in the distribution of electronic components. Based in Hongkong, we have already established firm and mutual-benefit business relationships with customers from,Europe,America and south Asia,supplying obsolete and hard-to-find components to meet their specific needs.

With the principle of “Quality Parts,Customers Priority,Honest Operation,and Considerate Service”,our business mainly focus on the distribution of electronic components. Line cards we deal with include Microchip,ALPS,ROHM,Xilinx,Pulse,ON,Everlight and Freescale. Main products comprise IC,Modules,Potentiometer,IC Socket,Relay,Connector.Our parts cover such applications as commercial,industrial, and automotives areas.

We are looking forward to setting up business relationship with you and hope to provide you with the best service and solution. Let us make a better world for our industry!

Contact us

Tel: +86-755-8981 8866 Fax: +86-755-8427 6832
Email & Skype: info@chipsmall.com Web: www.chipsmall.com
Address: A1208, Overseas Decoration Building, #122 Zhenhua RD., Futian, Shenzhen, China

ITEM NO.	PART NUMBER	DESCRIPTION	QTY.	COMPONENT NOTES
1	50-00315	Connector, dc plug, 3.5x1.35xL20mm, brass, nickel plated, molding type, white insulators	1	
2	30-00405	Wire, 2C TS, 24 AWG, UL2468, 300V, 80C, 3.0 mm, VW-1, PVC, 87A, white	1	
3	24-00002	Overmold, PVC, white	1	

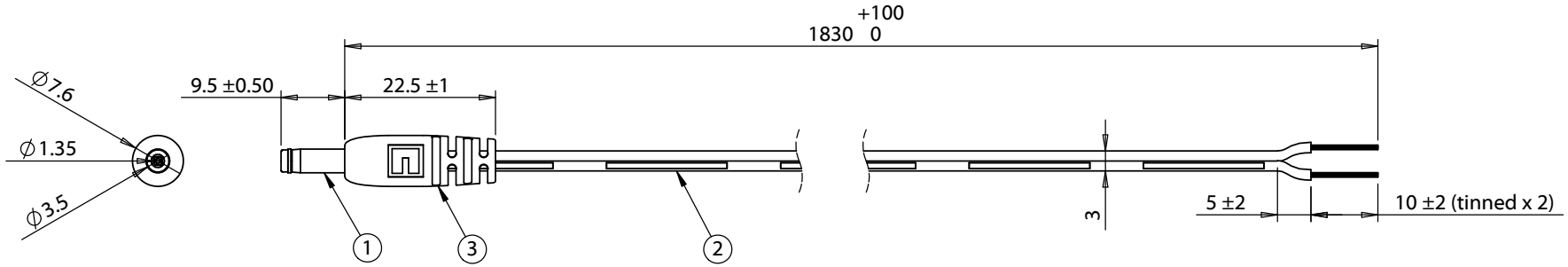

Notes:
Cables individually tied and bundled in groups of 10

Functionally equivalent components may be substituted

4 A, 12 Vdc

Wiring Diagram	
50-00315	wire color
center	white with stripe
sleeve	white

Revision:	Date:	Description:
A	10/31/2014	Initial release

Prepared: GL 2016.05.18 15:31:01 -07'00'

Verified: LA Digitally signed by LA DN: cn=LA, o=Tensility, ou=Engineering, email=QA002@Tensility.com, c=US Date: 2016.06.03 16:30:03 -07'00'

Dimensions are in millimeters.
Tolerances:
X: ± 0.5 mm
X.X: ± 0.3 mm
X.XX: ± 0.05 mm

Notes:

RoHS and REACH compliant

Function test: no open, no short circuit, no intermittent

Description:

Cable, 1830 mm, 3.5x1.35x9.5 mm 50-00315 dc plug to stripped tinned, 24 AWG, 30-00405 wire, white

TENSILITY

tel 1.541.323.3228 *800* 877.670.7118
fax 1.541.323.4202 *web* tensility.com

Size: A

Part number: 10-01249

Scale: 1:2

Sheet 1 of 1

5 4 3 2 1