Chipsmall Limited consists of a professional team with an average of over 10 year of expertise in the distribution of electronic components. Based in Hongkong, we have already established firm and mutual-benefit business relationships with customers from,Europe,America and south Asia,supplying obsolete and hard-to-find components to meet their specific needs.

With the principle of “Quality Parts,Customers Priority,Honest Operation,and Considerate Service”,our business mainly focus on the distribution of electronic components. Line cards we deal with include Microchip,ALPS,ROHM,Xilinx,Pulse,ON,Everlight and Freescale. Main products comprise IC,Modules,Potentiometer,IC Socket,Relay,Connector.Our parts cover such applications as commercial,industrial, and automotives areas.

We are looking forward to setting up business relationship with you and hope to provide you with the best service and solution. Let us make a better world for our industry!

Contact us

Tel: +86-755-8981 8866 Fax: +86-755-8427 6832
Email & Skype: info@chipsmall.com Web: www.chipsmall.com
Address: A1208, Overseas Decoration Building, #122 Zhenhua RD., Futian, Shenzhen, China

ITEM NO.	PART NUMBER	DESCRIPTION	QTY.	COMPONENT NOTES
1	50-00025	Connector, dc jack, 5.5x2.1xL17.4 mm, molding style	1	
2	30-00683	Wire, 2C TS, 18 AWG, UL2464, 300V, 80C, 5.2 mm, VW-1, PVC	1	
3	24-00183	Overmold, dc jack, 5.5 mm, Tensility	1	black

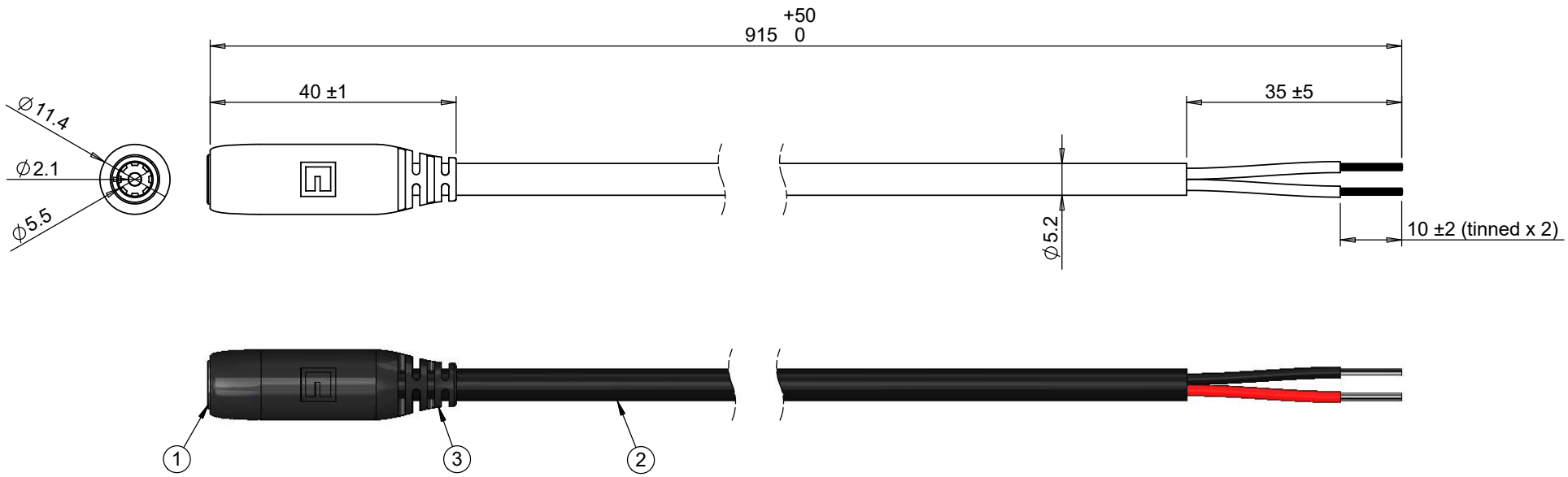

Notes:
Functionally equivalent components may be substituted

Electrical requirements: 7 A, 12 Vdc

Wiring Diagram	
50-00025	wire color
center	red
sleeve	black

Revision:	Date:	Description:
A	9/13/2016	Initial release

Prepared: DN — Digitally signed by DN Date: 2017.01.30 14:18:16 -08'00'

Verified: PS — Digitally signed by PS Date: 2017.01.30 15:34:08 -08'00'

Dimensions are in millimeters.
Tolerances:
X: ± 0.5 mm
X.X: ± 0.3 mm
X.XX: ± 0.05 mm

Notes:
RoHS and REACH compliant

Function test: no open, no short circuit, no intermittent

Description:
Cable, 915 mm, 5.5x2.1 mm 50-00025 dc jack to stripped tinned, 18 AWG, 30-00683 wire

TENSILITY
tel 1.541.323.3228 800 877.670.7118
fax 1.541.323.4202 web tensility.com

Size: A
Part number: 10-02247
Scale: 1:1
Sheet 1 of 1

5 4 3 2 1