Chipsmall Limited consists of a professional team with an average of over 10 year of expertise in the distribution of electronic components. Based in Hongkong, we have already established firm and mutual-benefit business relationships with customers from,Europe,America and south Asia,supplying obsolete and hard-to-find components to meet their specific needs.

With the principle of “Quality Parts,Customers Priority,Honest Operation,and Considerate Service”,our business mainly focus on the distribution of electronic components. Line cards we deal with include Microchip,ALPS,ROHM,Xilinx,Pulse,ON,Everlight and Freescale. Main products comprise IC,Modules,Potentiometer,IC Socket,Relay,Connector.Our parts cover such applications as commercial,industrial, and automotives areas.

We are looking forward to setting up business relationship with you and hope to provide you with the best service and solution. Let us make a better world for our industry!

Contact us

Tel: +86-755-8981 8866 Fax: +86-755-8427 6832
Email & Skype: info@chipsmall.com Web: www.chipsmall.com
Address: A1208, Overseas Decoration Building, #122 Zhenhua RD., Futian, Shenzhen, China

ITEM NO.	PART NUMBER	DESCRIPTION	QTY.	COMPONENT NOTES
1	50-00105	Connector, dc plug, 3.5x1.1xL18.8 mm, molding style, spring contacts	1	
2	30-00404	Wire, 2C TS, 24 AWG, UL2468, 300V, 80C, 3.0 mm, VW-1, PVC, 87A	1	
3	24-00009	Overmold, PVC	1	black

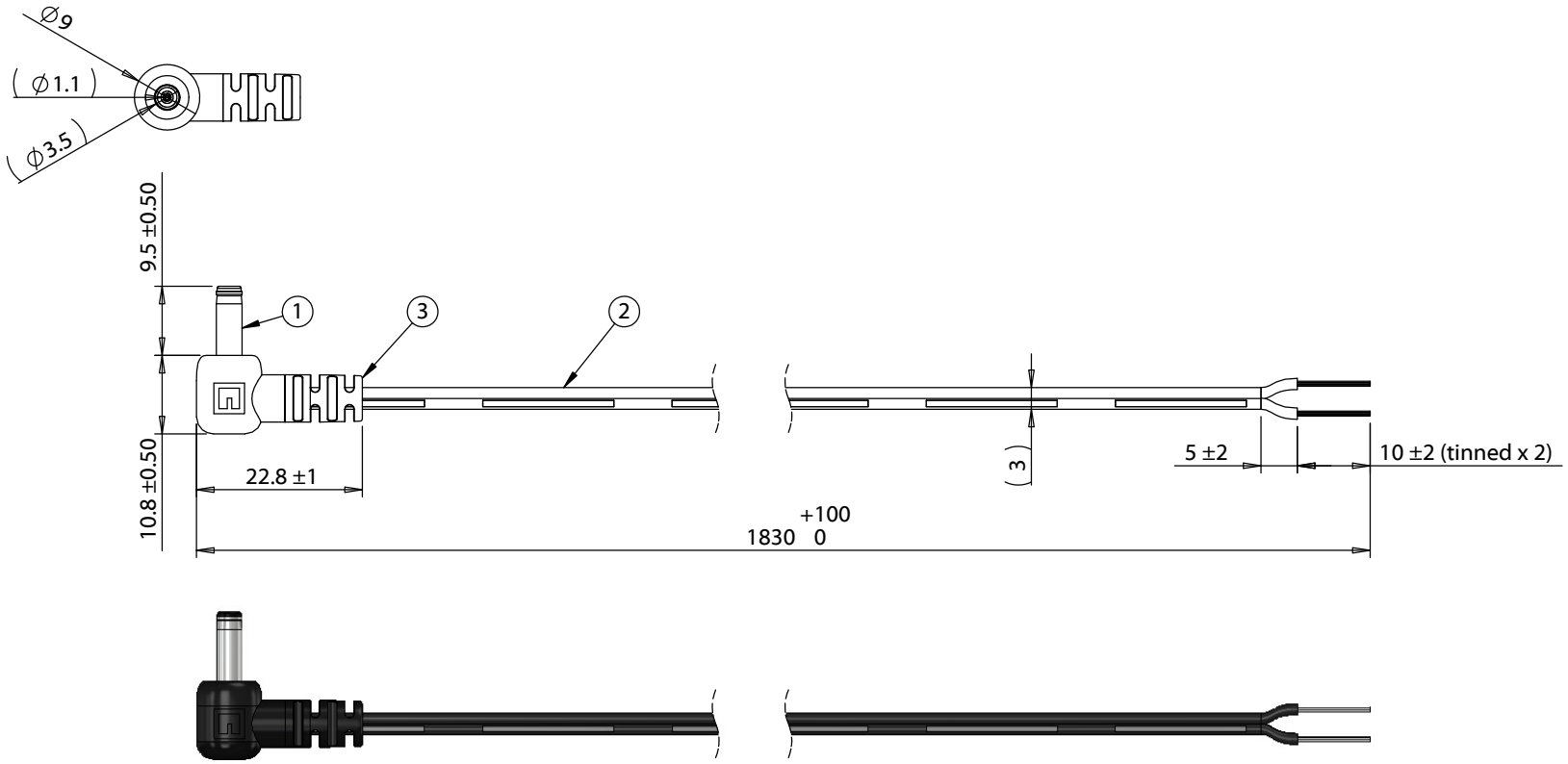

Wiring Diagram	
50-00105	wire color
center	black with stripe
sleeve	black

Notes:
Functionally equivalent components may be substituted

Revision:	Date:	Description:
A	10/3/2017	Initial release

Prepared: AG Digitally signed by AG Date: 2018.02.20 15:36:56 -08'00'

Verified: AW Digitally signed by AW Date: 2018.02.20 16:17:54 -08'00'

Dimensions are in millimeters.
Tolerances:
X: ± 0.5 mm
X.X: ± 0.3 mm
X.XX: ± 0.05 mm

Notes:

RoHS and REACH compliant

Function test: no open, no short circuit, no intermittent

Description:

Cable, 1830 mm, 3.5x1.1x9.5 mm 90° 50-00105 dc plug to 10 mm tinned, 24 AWG, UL2468, 30-00404 wire

TENSILITY
tel 1.541.323.3228 800 877.670.7118
fax 1.541.323.4202 web tensility.com

Size: A
Part number: 10-02504
Scale: 1:1
Sheet 1 of 1

5 4 3 2 1

To see a custom version of this cable assembly, call Tensility at 541-323-3228 or email engineering@tensility.com