Chipsmall Limited consists of a professional team with an average of over 10 year of expertise in the distribution of electronic components. Based in Hongkong, we have already established firm and mutual-benefit business relationships with customers from,Europe,America and south Asia,supplying obsolete and hard-to-find components to meet their specific needs.

With the principle of “Quality Parts,Customers Priority,Honest Operation,and Considerate Service”,our business mainly focus on the distribution of electronic components. Line cards we deal with include Microchip,ALPS,ROHM,Xilinx,Pulse,ON,Everlight and Freescale. Main products comprise IC,Modules,Potentiometer,IC Socket,Relay,Connector.Our parts cover such applications as commercial,industrial, and automotives areas.

We are looking forward to setting up business relationship with you and hope to provide you with the best service and solution. Let us make a better world for our industry!

Contact us

Tel: +86-755-8981 8866 Fax: +86-755-8427 6832
Email & Skype: info@chipsmall.com Web: www.chipsmall.com
Address: A1208, Overseas Decoration Building, #122 Zhenhua RD., Futian, Shenzhen, China

DO NOT SCALE
DIMENSIONS IN mm

METRIC

THIRD ANGLE PROJECTION

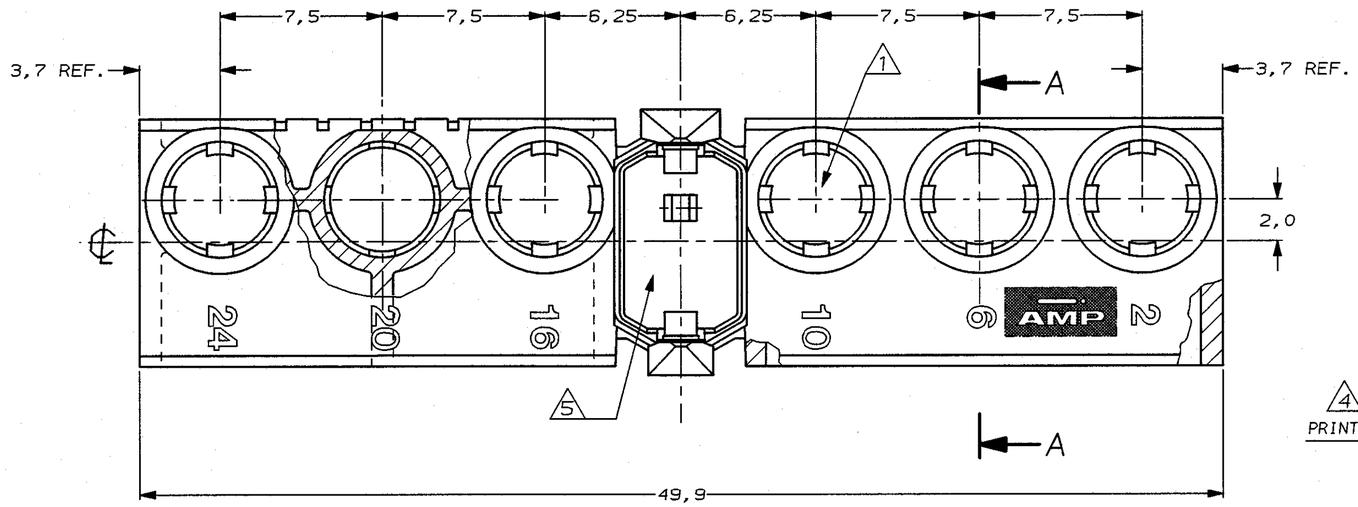

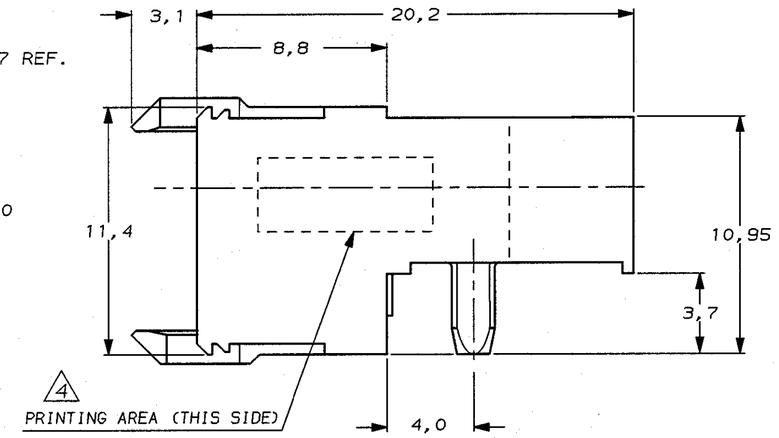

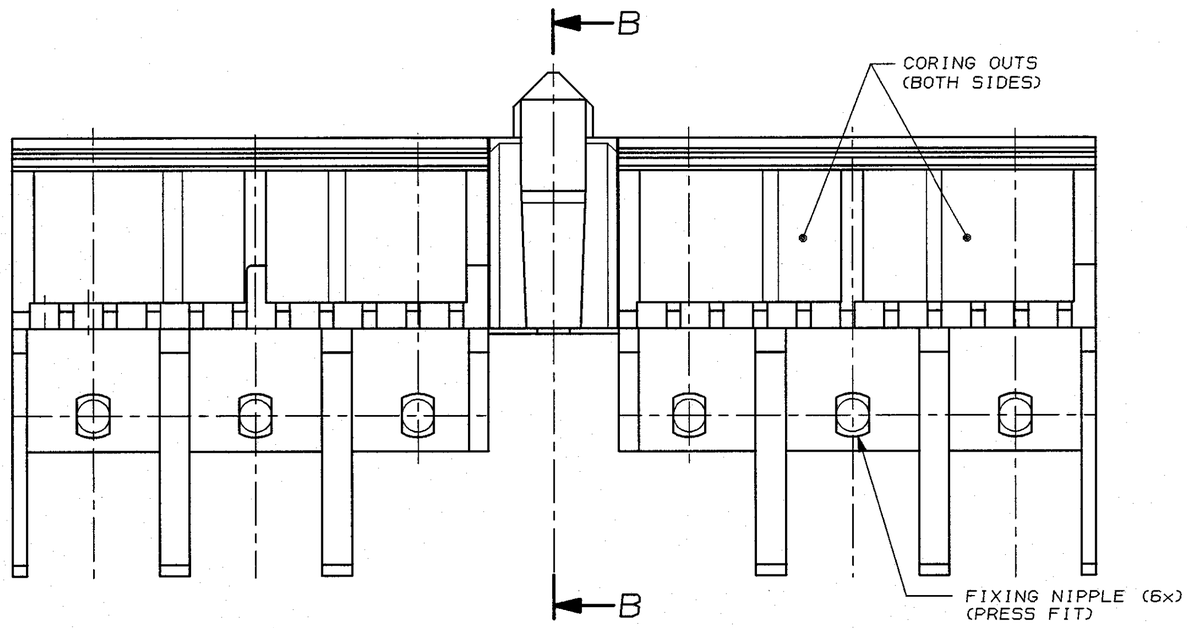

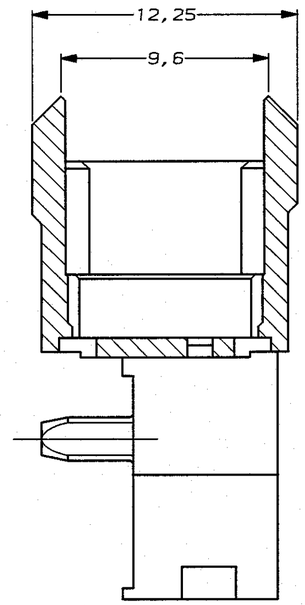

SECTION B-B

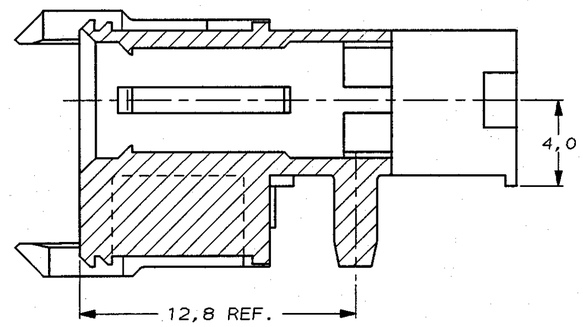

SECTION A-A

PRELIMINARY

NOTES:

1. CONTACT CAVITIES SUITABLE FOR 4,8 DIA. HIGH CURRENT, HIGH FREQUENCY OR FIBRE OPTIC CONTACTS AS PER DIN 41626 (SEE ALSO NOTE 6).
2. MATERIAL HOUSING : GREY GLASSFILLED POLYESTER (PBT).
3. MATERIAL HOUSING : GREY GLASSFILLED POLYMER (PCT).
4. CONNECTOR PRINTED WITH PARTNUMBER AND DATECODE.
5. AREA RESERVED FOR KEYING PART, BASIC P/N 100526.
6. NOT PLATED-THROUGH HOLES (6x).
7. 1,3 DIA. PLATED-THROUGH HOLES (30x) CAN BE OMITTED IF SPECIAL CONTACTS WITH CABLE CONNECTION OR FIBRE OPTIC CONTACTS ARE USED.

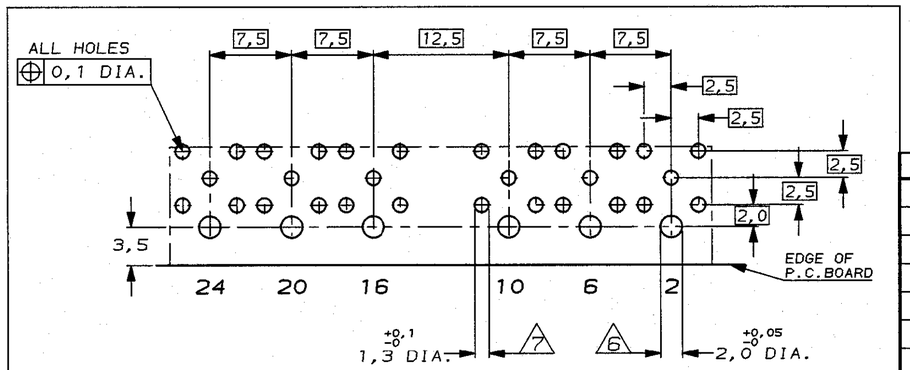

RECOMMENDED PCB-HOLE LAY-OUT
COMPONENT SIDE

		-		3	100746-3
		-		2	100746-1
		FINISH		MATERIAL	PARTNUMBER
–	–	-	-	-	
–	–	-	-	-	
–	–	-	-	-	
–	–	-	-	-	
–	–	-	-	-	
B	EH-0720-95	E.D.	B.M.	29-06-95	
A	H-9585	B.M.	B.M.	01-10-93	
LTR.	REVISION RECORD	DR.	CHK.	DATE	

CUSTOMER DRAWING — FOR REFERENCE ONLY WILL NOT BE UPDATED

© COPYRIGHT 1993 BY AMP HOLLAND B.V.
ALL INTERNATIONAL RIGHTS RESERVED. AMP PRODUCTS MAY BE COVERED BY U.S. AND FOREIGN AND/OR PATENTS PENDING.

THIS DRAWING IS UNPUBLISHED
~~RELEASED FOR PUBLICATION , 19~~

AMP — AMP HOLLAND B.V. 's-Hertogenbosch, The Netherlands.

NAME
Z-PACK 2mm HM
TYPE L FEMALE CONNECTOR HOUSING

DR.: S.MEEUWSEN	CHK.: B.MOOIJ	APP.: L.V.SOEST	
DATE: 12 MAR 92	DATE: 23 MAR 1992	DATE: 13 APR 1992	

DWG.No. C-100746 | REV.LTR. B | SHEET 1 OF 1 | A2

R6-129 (REV.04-91)

11 10 9 8 7 6 5 4 3 2 1