Chipsmall Limited consists of a professional team with an average of over 10 year of expertise in the distribution of electronic components. Based in Hongkong, we have already established firm and mutual-benefit business relationships with customers from,Europe,America and south Asia,supplying obsolete and hard-to-find components to meet their specific needs.

With the principle of “Quality Parts,Customers Priority,Honest Operation,and Considerate Service”,our business mainly focus on the distribution of electronic components. Line cards we deal with include Microchip,ALPS,ROHM,Xilinx,Pulse,ON,Everlight and Freescale. Main products comprise IC,Modules,Potentiometer,IC Socket,Relay,Connector.Our parts cover such applications as commercial,industrial, and automotives areas.

We are looking forward to setting up business relationship with you and hope to provide you with the best service and solution. Let us make a better world for our industry!

Contact us

Tel: +86-755-8981 8866 Fax: +86-755-8427 6832
Email & Skype: info@chipsmall.com Web: www.chipsmall.com
Address: A1208, Overseas Decoration Building, #122 Zhenhua RD., Futian, Shenzhen, China

Copyright FCI.

FCIconnect.com

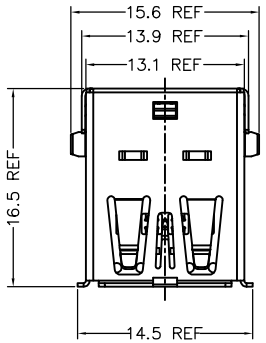

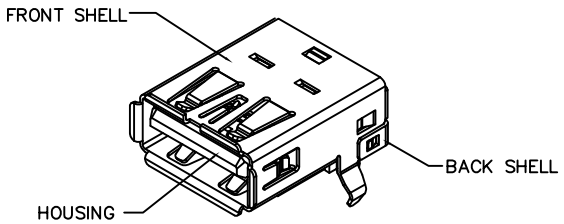

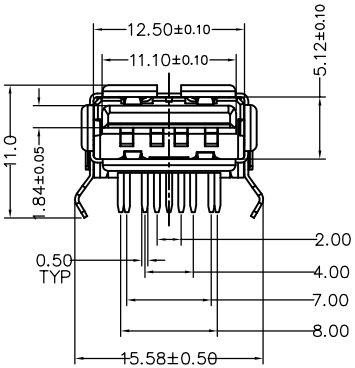

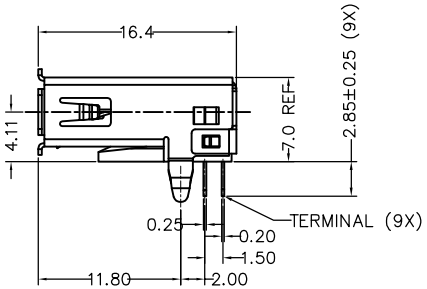

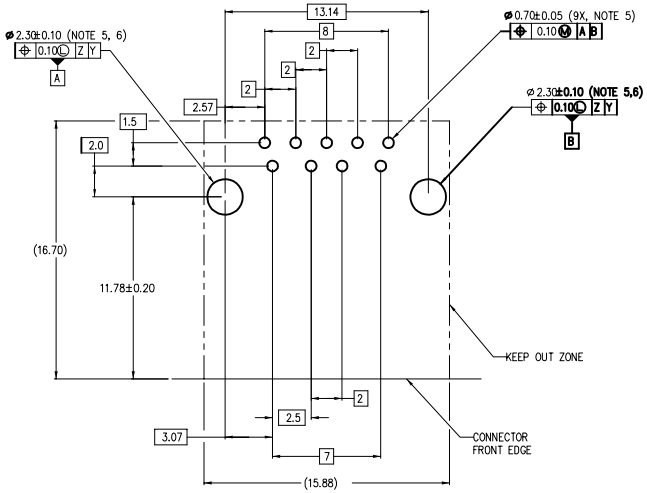

RECOMMENDED PCB LAYOUT
TOP VIEW (THICKNESS: 1.6±0.1mm)

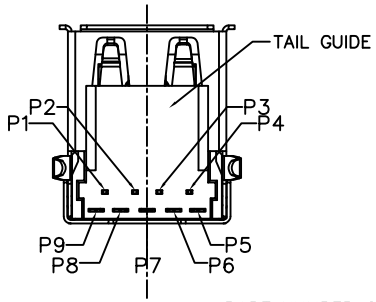

PART NUMBER CODE:
10117835–X0XLF

PLATING OPTION ON CONTACT AREA
- 1: 30u" (0.76um) Min. gold (Durability: 3500)
- 2: Gold Flash (Durability: 1500)
- 3: 15u" (0.38um) Min. gold (Durability: 3000)

PACKAGE TYPE
- 0: TRAY
- T: TAPE & REEL

Notes:

1) Materials and Finish
   - Housing & Tail Guide: Glass fiber filled thermoplastic reisn, UL94 V-0 rated, color blue.
   - Terminals: Copper Alloy, 50u"(1.27um) Min. Ni underplated over all.
     - Contact area: see table
     - Tail area: 80u"(2.0um) Min. Matte Tin plated.
   - Front Shell: Copper Alloy, 50u"(1.27um) Min. Ni plated over all.
   - Back Shell: Steel, 80u"(2.0um) Min. Ni plated over all.
2) Product specifcation refer to FCI GS-12-0928.
3) Package specification refer to GS-14-2157 .
4) Housing will withstand exposure to 260°c peak temperature for 10 seconds in a convection reflow oven
5) Product meets European Union Directives and other country requlations as desribed in FCI GS-22-008.
6) Recommeded PCB hole is finished plating throug hole (PTH) size.
7) Datum Z,Y and basic dimensions were constructed by customer.

mat'l. code				surface ASME Y14.5	tolerance ASME Y14.5	projection	product family USB 3.0
ltr	ecn no	dr	date	tolerances unless otherwise specified			title
A	–	BF	01/04/2012	angles / linear	X.±0.30	MM	USB 3.0 Standard–A Receptacle Right Angle Type Soldering to Board Termination
B	ELX–N–012221	A.ZH	07/16/2012		X.X±0.25		
C	ELX–N–17163	L.Q	03/10/2014	X°±1°	X.XX±0.20	scale	
D	ELX–N–17795	L.Q	05/27/2014	dr	BEER FU	2012–01–04	dwg no 10117835 sheet 1 of 1 size A4
E	ELX–N–19547	L.Q	11/21/2014	engr	BEER FU	2012–01–04	
F	ELX–N–21815	L.Q	09/01/2015	chr	BEER FU	2012–01–04	
				appd	BEER FU	2012–01–04	type CUSTOMER Drawing
sheet index	revision	F					
	sheet	1					

form: A4mmXLc

PDS: Rev :F STATUS:Released Printed: Sep 08, 2015