Chipsmall Limited consists of a professional team with an average of over 10 year of expertise in the distribution of electronic components. Based in Hongkong, we have already established firm and mutual-benefit business relationships with customers from,Europe,America and south Asia,supplying obsolete and hard-to-find components to meet their specific needs.

With the principle of “Quality Parts,Customers Priority,Honest Operation,and Considerate Service”,our business mainly focus on the distribution of electronic components. Line cards we deal with include Microchip,ALPS,ROHM,Xilinx,Pulse,ON,Everlight and Freescale. Main products comprise IC,Modules,Potentiometer,IC Socket,Relay,Connector.Our parts cover such applications as commercial,industrial, and automotives areas.

We are looking forward to setting up business relationship with you and hope to provide you with the best service and solution. Let us make a better world for our industry!

Contact us

Tel: +86-755-8981 8866 Fax: +86-755-8427 6832
Email & Skype: info@chipsmall.com Web: www.chipsmall.com
Address: A1208, Overseas Decoration Building, #122 Zhenhua RD., Futian, Shenzhen, China

ISS.	DATE	E.C.N.	DESCRIPTION
1	17-Aug-06		FIRST ISSUE

© 2008 CARCLO

ALL DIMENSIONS IN mm

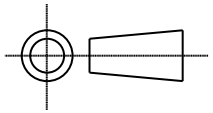

CUSTOMER DRAWING

NOTES:
1. MATERIAL - UV STABILISED POLYCARBONATE
2. INCLUSIONS SPECIFIED TO BS4301

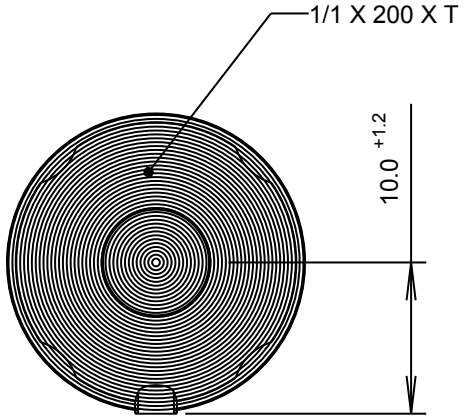

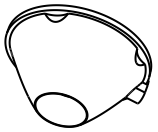

3D VIEW
SCALE 1:1

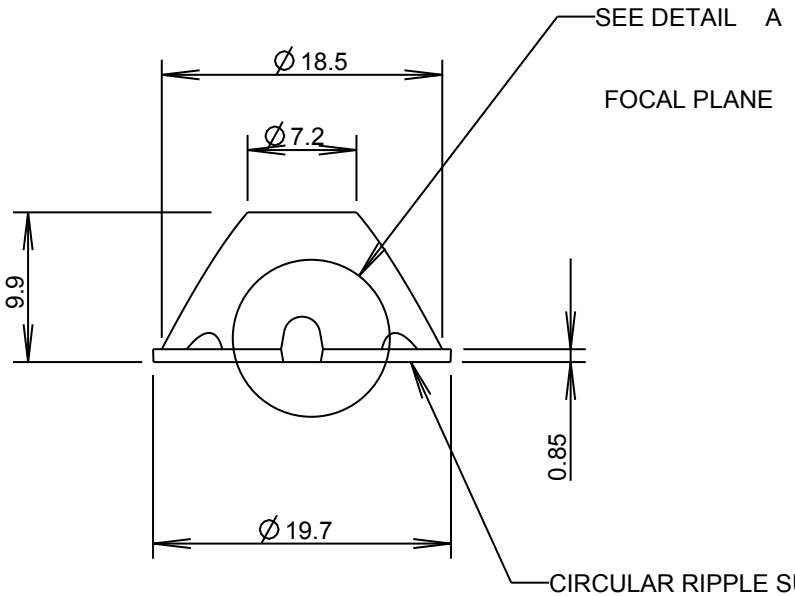

DETAIL A
SCALE 4:1

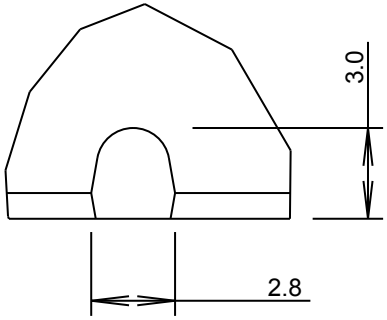

carclo technical plastics

CARCLO TECHNICAL PLASTICS (SLOUGH)
111 BUCKINGHAM AVE, SLOUGH
SL1 4PF, ENGLAND
TEL: +44 1753 575011 FAX: +44 1753 811359
e-mail: design@carclo-optics.com}

GENERAL TOLERANCES (UNLESS STATED)

LINEAR		ANGULAR	
X	+/- 0.25	X	+/- 1°
X.X	+/- 0.1	X.X	+/- 0.5°
X.XX	+/- 0.05	X.XX	+/- 0.1°

CUSTOMER: CARCLO

TITLE: MEDIUM CIRCULAR 0.8MM OFFSET FOCUS 20MM DIA OPTIC

DRAWN	AJD	DATE	17-Aug-06
CHK'D		DATE	
APP'D		DATE	

SCALE	CARCLO PART No.
2:1	10208

SIZE	CARCLO DRG. No.	SHEET
A4	60440	1 OF 1