Chipsmall Limited consists of a professional team with an average of over 10 year of expertise in the distribution of electronic components. Based in Hongkong, we have already established firm and mutual-benefit business relationships with customers from,Europe,America and south Asia,supplying obsolete and hard-to-find components to meet their specific needs.

With the principle of “Quality Parts,Customers Priority,Honest Operation,and Considerate Service”,our business mainly focus on the distribution of electronic components. Line cards we deal with include Microchip,ALPS,ROHM,Xilinx,Pulse,ON,Everlight and Freescale. Main products comprise IC,Modules,Potentiometer,IC Socket,Relay,Connector.Our parts cover such applications as commercial,industrial, and automotives areas.

We are looking forward to setting up business relationship with you and hope to provide you with the best service and solution. Let us make a better world for our industry!

Contact us

Tel: +86-755-8981 8866 Fax: +86-755-8427 6832
Email & Skype: info@chipsmall.com Web: www.chipsmall.com
Address: A1208, Overseas Decoration Building, #122 Zhenhua RD., Futian, Shenzhen, China

REV.	DATE	D.C.N. NUMBER	DESCRIPTION	CHECKED BY DATE	APPROVED BY DATE
1	04-May-07		FIRST ISSUE		
1A	01-May-12	03/11/1292	CHANGED NOTES AND CHANGED DIMENTIONS	FP 01-May-12	PW 02-May-12

CUSTOMER DRAWING

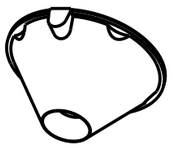

SCALE 1:1
GENERAL VIEW

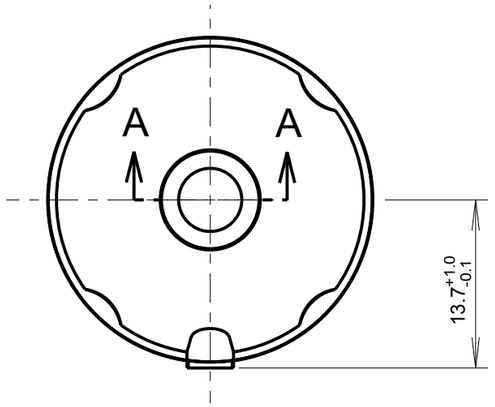

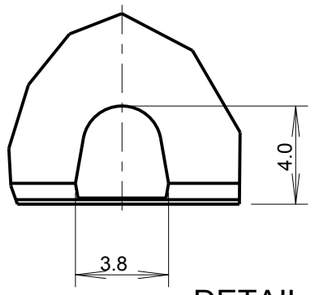

DETAIL A
SCALE 4:1

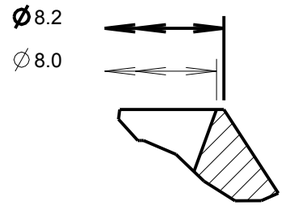

SECTION A-A
SCALE 12:1

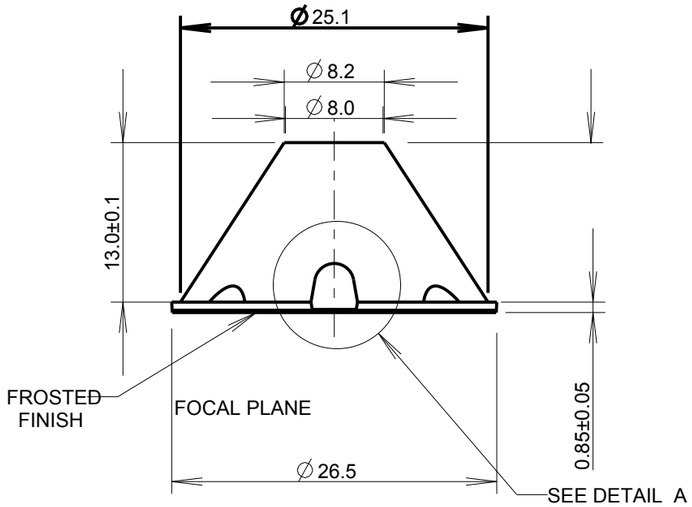

MATERIAL: POLYCARBONATE

Sheet 2 of 2

carclo technical plastics
103 BUCKINGHAM AVE, SLOUGH,
BERKSHIRE, SL1 4PF, UK
Tel: +44 1753 610800 Fax: +44 1753 811359
design@carclo-optics.com
www.carclo-optics.com

Title	WIDE SOFT BEAM FROSTED 26.5mm DIA LED OPTIC				
Customer	CARCLO				
Drawn by	AJD	Material	SEE NOTES	Scale	AS SPEC.
THIRD ANGLE PROJECTION	GENERAL TOLERANCES UNLESS OTHERWISE STATED LINEAR: 0 ± 0.25, 0.0 ± 0.1, 0.00 ± 0.05; ANGULAR: 0 ± 1°, 0.0 ± 0.5°, 0.00 ± 0.1°	CARCLO technical plastics	DIMENSIONS IN mm	Format Size	A3
		CONFIDENTIAL: UNAUTHORISED COPYING, DISCUSSION & DISTRIBUTION PROHIBITED	CAD File	60463	
			Drw. N°	60463	Part N° 10260