Chipsmall Limited consists of a professional team with an average of over 10 year of expertise in the distribution of electronic components. Based in Hongkong, we have already established firm and mutual-benefit business relationships with customers from,Europe,America and south Asia,supplying obsolete and hard-to-find components to meet their specific needs.

With the principle of “Quality Parts,Customers Priority,Honest Operation,and Considerate Service”,our business mainly focus on the distribution of electronic components. Line cards we deal with include Microchip,ALPS,ROHM,Xilinx,Pulse,ON,Everlight and Freescale. Main products comprise IC,Modules,Potentiometer,IC Socket,Relay,Connector.Our parts cover such applications as commercial,industrial, and automotives areas.

We are looking forward to setting up business relationship with you and hope to provide you with the best service and solution. Let us make a better world for our industry!

Contact us

Tel: +86-755-8981 8866 Fax: +86-755-8427 6832
Email & Skype: info@chipsmall.com Web: www.chipsmall.com
Address: A1208, Overseas Decoration Building, #122 Zhenhua RD., Futian, Shenzhen, China

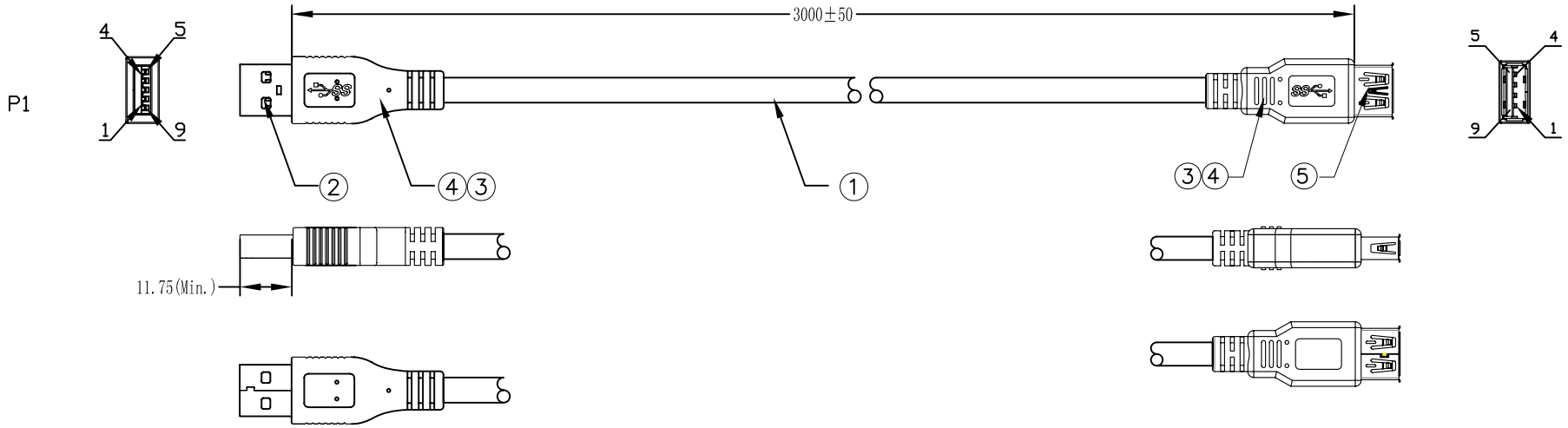

1.Wiring Diagram.

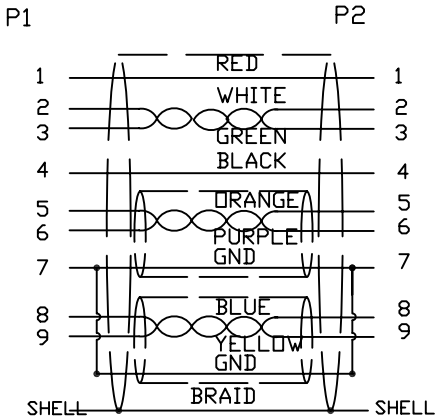

2.Cable test condition :

Open / Short : 100%

Insulation resistance : 5M ohms

Contact resistance : 2 ohm

Hipot : DC 300V / 1 sec

3.Each pcs with PE polybag.

NO.	PART NO.	DESCRIPTION	QTY	UNIT/REF
5	CONN	USB3.0 A FEMAILE G/F BLUE	1	P2
4	PVC	45P PVC BLACK OVERMOLD	25g	
3	PE	LLDPE 500026 6201	16g	
2	CONN	USB3.0 A/M G/F BLUE	1	P1
1	CABLE	《28AWG（7/0。12TC）*1P+D(7/0.10TC)+AL+M》*2+28AWG（7/0。12TC）*1P+24AWG(7/0.2TC)*2C+A+D+B（96/0。12AM） OD5.5 BLACK	1	3000mm

BILL OF MATERIAL

REV	ECN#	DESCRIPTION	DATE
A		INITAL RELEASE	2014/08/28

CnC Tech,LLC

P/N: 103-1010-BL-00300 REV A

TITLE: CABLE USB3.0 A/M TO A/F

DRAWN: WENC DATE: 08/24/14

CHECKED: EDWIN 08/24/14

APPROVAL

CUSTOMER P/N: REV A

CUSTOMER:

SHEET 1 OF 1