Chipsmall Limited consists of a professional team with an average of over 10 year of expertise in the distribution of electronic components. Based in Hongkong, we have already established firm and mutual-benefit business relationships with customers from,Europe,America and south Asia,supplying obsolete and hard-to-find components to meet their specific needs.

With the principle of “Quality Parts,Customers Priority,Honest Operation,and Considerate Service”,our business mainly focus on the distribution of electronic components. Line cards we deal with include Microchip,ALPS,ROHM,Xilinx,Pulse,ON,Everlight and Freescale. Main products comprise IC,Modules,Potentiometer,IC Socket,Relay,Connector.Our parts cover such applications as commercial,industrial, and automotives areas.

We are looking forward to setting up business relationship with you and hope to provide you with the best service and solution. Let us make a better world for our industry!

Contact us

Tel: +86-755-8981 8866 Fax: +86-755-8427 6832
Email & Skype: info@chipsmall.com Web: www.chipsmall.com
Address: A1208, Overseas Decoration Building, #122 Zhenhua RD., Futian, Shenzhen, China

THIS DRAWING IS UNPUBLISHED. RELEASED FOR PUBLICATION - ,- .
© COPYRIGHT - By - ALL RIGHTS RESERVED.

LOC	DIST
AD	00

REVISIONS

P	LTR	DESCRIPTION	DATE	DWN	APVD
	U2	REVISED PER ECO-11-004587	11MAR11	RK	HMR

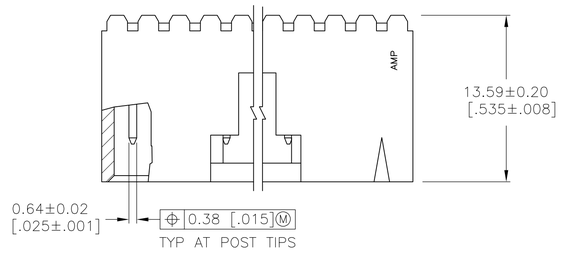

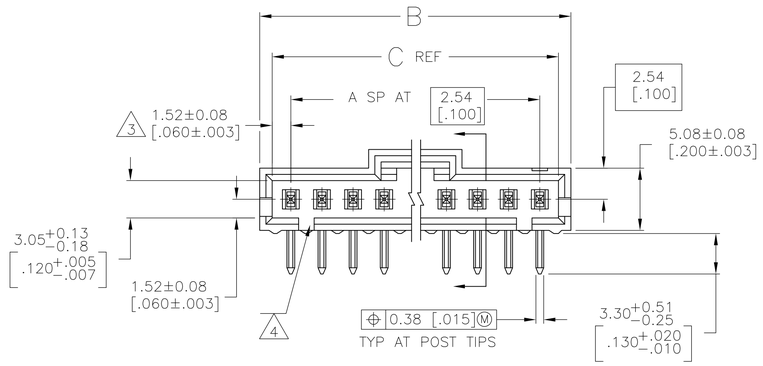

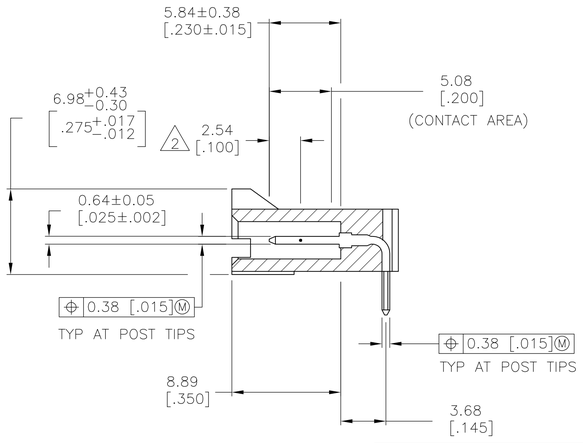

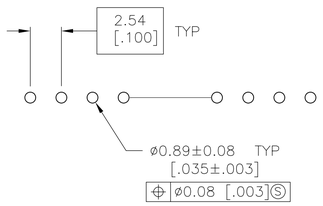

RECOMMENDED HOLE LAYOUT

1. .000100 BRIGHT TIN–LEAD OVER .000050 NICKEL.
2. POINT OF MEASUREMENT FOR PLATING THICKNESS.
3. THE NOTED DIMENSIONS APPLY AT THE INTERSECTION OF THE POST AND THE HOUSING.
4. ON ASSEMBLIES WITH FOUR OR MORE POSITIONS, TWO POLARIZATION SLOTS. ON ASSEMBLIES WITH TWO OR THREE POSITIONS, ONE POLARIZATION SLOT.
5. .000100 BRIGHT TIN OVER .000050 NICKEL.
6. PRELIMINARY PART – NOT RELEASED FOR PRODUCTION.
7. .000100 MATTE TIN OVER .000050 NICKEL.
8. HIGH TEMPERATURE CONFIGURATION
9. OBSOLETE PARTS: OBSOLETE CIS STREAMLINING PER D.RENAUD/D.SINISI

REMARKS	PLATING	C	B	A	NO. OF POSN	PART NO.
8	7	64.01 [2.520]	66.04 [2.600]	24	25	7-103634-4
8	7	61.47 [2.420]	63.50 [2.500]	23	24	7-103634-3
8	7	58.93 [2.320]	60.96 [2.400]	22	23	7-103634-2
8	7	56.39 [2.220]	58.42 [2.300]	21	22	7-103634-1
8	7	53.85 [2.120]	55.88 [2.200]	20	21	7-103634-0
8	7	51.31 [2.020]	53.34 [2.100]	19	20	6-103634-9
8	7	48.77 [1.920]	50.80 [2.000]	18	19	6-103634-8
8	7	46.23 [1.820]	48.26 [1.900]	17	18	6-103634-7
8	7	43.69 [1.720]	45.72 [1.800]	16	17	6-103634-6
8	7	41.15 [1.620]	43.18 [1.700]	15	16	6-103634-5
8	7	38.61 [1.520]	40.64 [1.600]	14	15	6-103634-4
8	7	36.07 [1.420]	38.10 [1.500]	13	14	6-103634-3
8	7	33.53 [1.320]	35.56 [1.400]	12	13	6-103634-2
8	7	30.99 [1.220]	33.02 [1.300]	11	12	6-103634-1
8	7	28.45 [1.120]	30.48 [1.200]	10	11	6-103634-0
8	7	25.91 [1.020]	27.94 [1.100]	9	10	5-103634-9
8	7	23.37 [.920]	25.40 [1.000]	8	9	5-103634-8
8	7	20.83 [.820]	22.86 [.900]	7	8	5-103634-7
8	7	18.29 [.720]	20.32 [.800]	6	7	5-103634-6
8	7	15.75 [.620]	17.78 [.700]	5	6	5-103634-5
8	7	13.21 [.520]	15.24 [.600]	4	5	5-103634-4
8	7	10.67 [.420]	12.70 [.500]	3	4	5-103634-3
8	7	8.13 [.320]	10.16 [.400]	2	3	5-103634-2
8	7	5.59 [.220]	7.62 [.300]	1	2	5-103634-1

OBSOLETE 9

REMARKS	PLATING	C	B	A	NO. OF POSN	PART NO.
5		30.99 [1.220]	33.02 [1.300]	11	12	3-103634-4
5		25.91 [1.020]	27.94 [1.100]	9	10	3-103634-3
5	6	23.37 [.920]	25.40 [1.000]	8	9	3-103634-2
5		18.29 [.720]	20.32 [.800]	6	7	3-103634-1
5	6	15.75 [.620]	17.78 [.700]	5	6	3-103634-0
5		5.59 [.220]	7.62 [.300]	1	2	2-103634-9
5		41.15 [1.620]	43.18 [1.700]	15	16	2-103634-8
5		13.21 [.520]	15.24 [.600]	4	5	2-103634-7
5	6	10.67 [.420]	12.70 [.500]	3	4	2-103634-6
5		8.13 [.320]	10.16 [.400]	2	3	2-103634-5
1		64.01 [2.520]	66.04 [2.600]	24	25	2-103634-4
1		61.47 [2.420]	63.50 [2.500]	23	24	2-103634-3
1		58.93 [2.320]	60.96 [2.400]	22	23	2-103634-2
1		56.39 [2.220]	58.42 [2.300]	21	22	2-103634-1
1		53.85 [2.120]	55.88 [2.200]	20	21	2-103634-0
1		51.31 [2.020]	53.34 [2.100]	19	20	1-103634-9
1		48.77 [1.920]	50.80 [2.000]	18	19	1-103634-8
1		46.23 [1.820]	48.26 [1.900]	17	18	1-103634-7
1		43.69 [1.720]	45.72 [1.800]	16	17	1-103634-6
1		41.15 [1.620]	43.18 [1.700]	15	16	1-103634-5
1		38.61 [1.520]	40.64 [1.600]	14	15	1-103634-4
1		36.07 [1.420]	38.10 [1.500]	13	14	1-103634-3
1		33.53 [1.320]	35.56 [1.400]	12	13	1-103634-2
1		30.99 [1.220]	33.02 [1.300]	11	12	1-103634-1
1		28.45 [1.120]	30.48 [1.200]	10	11	1-103634-0
1		25.91 [1.020]	27.94 [1.100]	9	10	103634-9
1		23.37 [.920]	25.40 [1.000]	8	9	103634-8
1		20.83 [.820]	22.86 [.900]	7	8	103634-7
1		18.29 [.720]	20.32 [.800]	6	7	103634-6
1		15.75 [.620]	17.78 [.700]	5	6	103634-5
1		13.21 [.520]	15.24 [.600]	4	5	103634-4
1		10.67 [.420]	12.70 [.500]	3	4	103634-3
1		8.13 [.320]	10.16 [.400]	2	3	103634-2
1		5.59 [.220]	7.62 [.300]	1	2	103634-1

9 SUPERCEDED BY 7-103634-4

9 SUPERCEDED BY 6-103634-6

OBSOLETE 9

THIS DRAWING IS A CONTROLLED DOCUMENT.

DIMENSIONS: mm [INCHES]

TOLERANCES UNLESS OTHERWISE SPECIFIED:
0 PLC ± –
1 PLC ± –
2 PLC ± –
3 PLC ± –
4 PLC ± –
ANGLES ± –

MATERIAL: HOUSING
FINISH: SEE TABLE

DWN S. SHUEY 3-5-91
CHK L.CASTAGNA 3-27-91
APVD L.CASTAGNA 3-27-91
PRODUCT SPEC 108-25034
APPLICATION SPEC 114-25026
WEIGHT –

TE Connectivity

NAME: HEADER ASSEMBLY, RIGHT ANGLE, SINGLE ROW, 2.54 [.100] C/L 0.64 [.025] SQ POST, WITH PLZN & LATCHING, AMPMODU MTE

SIZE A1 | CAGE CODE 00779 | DRAWING NO C-103634 | RESTRICTED TO –

CUSTOMER DRAWING | SCALE 4:1 | SHEET 1 OF 1 | REV U2