Chipsmall Limited consists of a professional team with an average of over 10 year of expertise in the distribution of electronic components. Based in Hongkong, we have already established firm and mutual-benefit business relationships with customers from,Europe,America and south Asia,supplying obsolete and hard-to-find components to meet their specific needs.

With the principle of “Quality Parts,Customers Priority,Honest Operation,and Considerate Service”,our business mainly focus on the distribution of electronic components. Line cards we deal with include Microchip,ALPS,ROHM,Xilinx,Pulse,ON,Everlight and Freescale. Main products comprise IC,Modules,Potentiometer,IC Socket,Relay,Connector.Our parts cover such applications as commercial,industrial, and automotives areas.

We are looking forward to setting up business relationship with you and hope to provide you with the best service and solution. Let us make a better world for our industry!

Contact us

Tel: +86-755-8981 8866 Fax: +86-755-8427 6832
Email & Skype: info@chipsmall.com Web: www.chipsmall.com
Address: A1208, Overseas Decoration Building, #122 Zhenhua RD., Futian, Shenzhen, China

ISS.	DATE	E.C.N.	DESCRIPTION
1	01-Aug-08		FIRST RELEASE

© 2008 CARCLO

ALL DIMENSIONS IN mm

CUSTOMER DRAWING

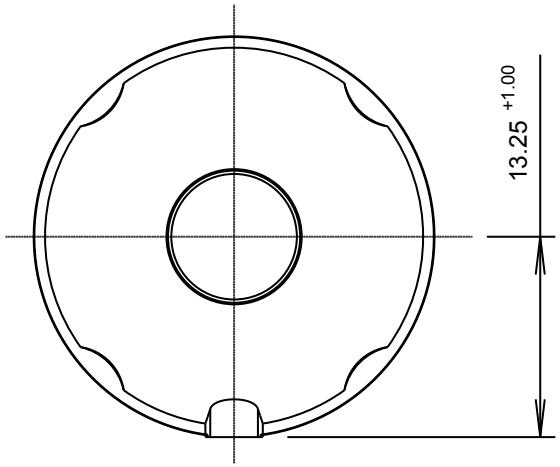

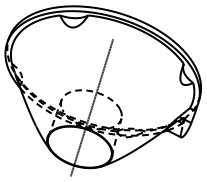

SCALE 1:1
GENERAL VIEW

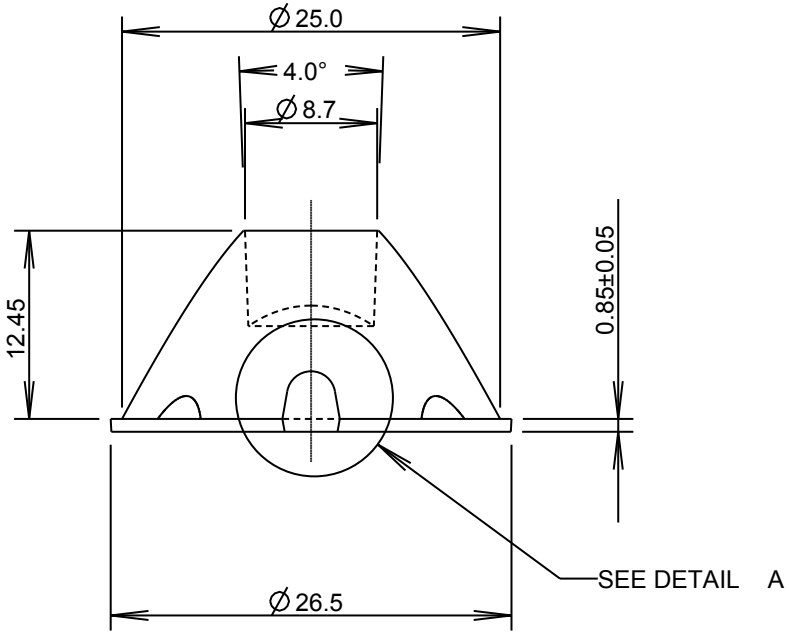

DETAIL A
SCALE 4:1

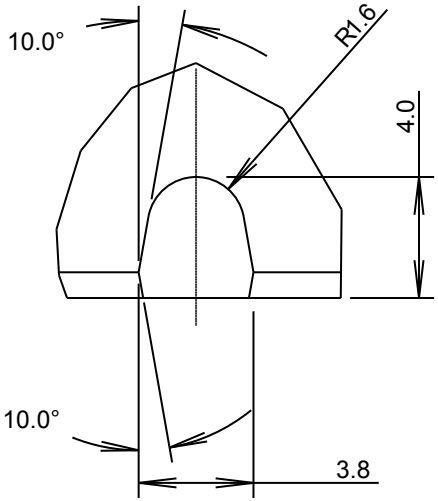

MATERIAL: POLYCARBONATE

carclo
technical plastics

CARCLO TECHNICAL PLASTICS (SLOUGH) LTD.
111 BUCKINGHAM AVE, SLOUGH
SL1 4PF, ENGLAND
TEL: +44 1753 575011 FAX: +44 1753 811359
e-mail: design@ctpcoil.co.uk}

GENERAL TOLERANCES (UNLESS STATED)

LINEAR		ANGULAR	
X	+/- 0.25	X	+/- 1°
X.X	+/- 0.1	X.X	+/- 0.5°
X.XX	+/- 0.05	X.XX	+/- 0.1°

CUSTOMER

TITLE
26.5mm OPTIC 0.8mm OFFSET NARROW FROSTED

DRAWN	M.K.	DATE	01-Aug-08
CHK'D		DATE	
APP'D		DATE	
SCALE	2:1	COIL PART No.	10392
SIZE	A4	COIL DRG. No.	60508
SHEET	1 OF 1		