Chipsmall Limited consists of a professional team with an average of over 10 year of expertise in the distribution of electronic components. Based in Hongkong, we have already established firm and mutual-benefit business relationships with customers from,Europe,America and south Asia,supplying obsolete and hard-to-find components to meet their specific needs.

With the principle of “Quality Parts,Customers Priority,Honest Operation,and Considerate Service”,our business mainly focus on the distribution of electronic components. Line cards we deal with include Microchip,ALPS,ROHM,Xilinx,Pulse,ON,Everlight and Freescale. Main products comprise IC,Modules,Potentiometer,IC Socket,Relay,Connector.Our parts cover such applications as commercial,industrial, and automotives areas.

We are looking forward to setting up business relationship with you and hope to provide you with the best service and solution. Let us make a better world for our industry!

Contact us

Tel: +86-755-8981 8866 Fax: +86-755-8427 6832
Email & Skype: info@chipsmall.com Web: www.chipsmall.com
Address: A1208, Overseas Decoration Building, #122 Zhenhua RD., Futian, Shenzhen, China

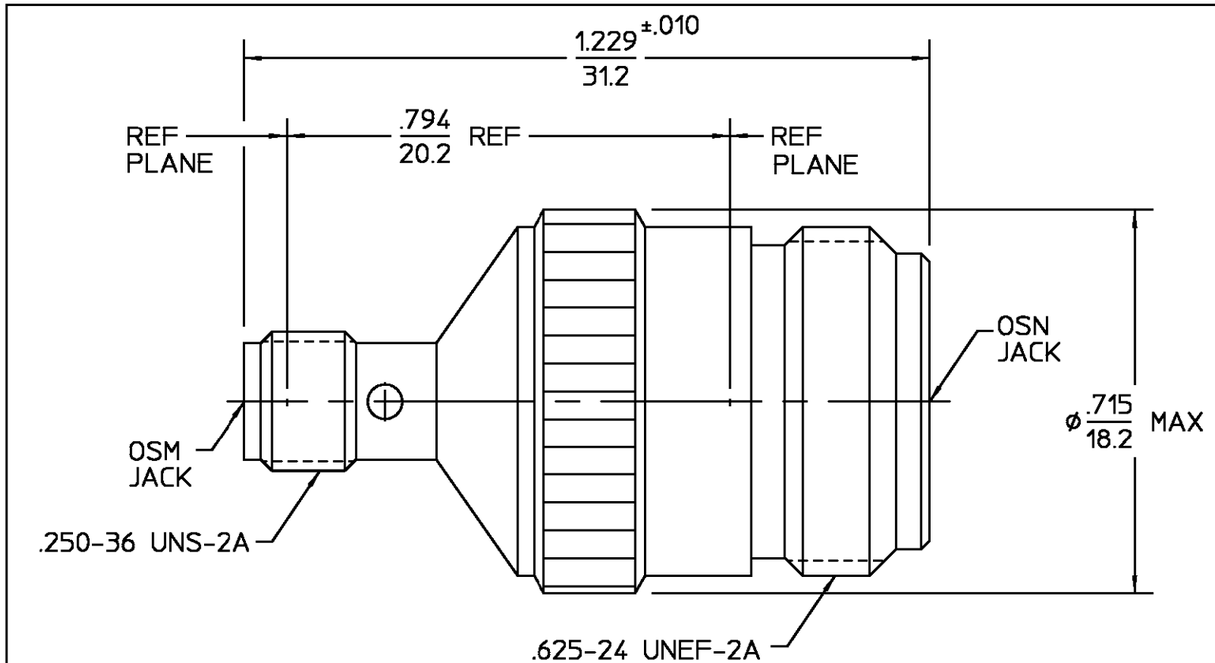

REVISIONS			
REV	DESCRIPTION	DATE	APPROVED
02_1	REVISED	9/25/98	

ELECTRICAL	MECHANICAL	ENVIRONMENTAL
Nominal Impedance (Ohms) 50	Interface Dimensions MIL-STD-348A, Fig. 310.2 (OSM) & 304.2 (N)	Temperature Rating -65°C to +125°C
Frequency Range (GHz) DC to 18	Recommended Mating Torque N/A	Vibration MIL-STD-202, Method 204, Condition B
Volt Rating (VRMS MAX) @ Sea Level 335	Mating Characteristics:	Shock MIL-STD-202, Method 213, Condition I.
VSWR DC - 12.4GHz: 1.06+.005f(GHz) MAX; 12.4 - 18.0GHz: .83+.023f(GHz) MAX	OSM-Insertion (MAX lbs) 3.0	Thermal Shock MIL-STD-202, Method 107, Condition C, except high temp shall be +115°C
Insertion Loss (dB MAX) .18 @ 9GHz	Type N-Insertion (MAX lbs) 2.0	Moisture Resistance MIL-STD-202, Method 106
RF Leakage (dB MIN) -65 @ 2-3 GHz	OSM-Withdrawal (MIN oz) 1.0	Corrosion - MIL-STD-202, Method 101, Condition B, 5% salt spray
Corona, 70,000 Ft (VRMS MIN) 250	Type N-Withdrawal (MIN oz) 2.0	
Dielectric Withstanding Voltage (VRMS MIN) @ Sea Level 1,000	Force to Engage and Disengage	
Contact Resistance (Milliohms MAX)	OSM (in-lbs MAX) 2.0	
Center Contact 4.1	Type N (in-lbs MAX) 6.0	
Outer Contact 2.2	Center Contact Captivation	
Cable to Housing N/A	Axial (lbs) 6.0	
RF High Potential @ Sea Level (VRMS MIN @ 5 MHz) 1,000	Radial (in-oz) 4.0	
I.R.(Megohms MIN) 5,000	Cable Retention	
	Axial Force (lbs) N/A	
	Torque (in-oz) N/A	
	Weight (Grams) TBD	

.XXX = in
XX.X = mm (REF)

COMPONENT	MATERIAL	FINISH
HOUSING	STAINLESS STEEL PER ASTM-A484 AND ASTM-A582, TYPE 303	PASSIVATE PER QQ-P-35
DIELECTRIC	PTFE FLUOROCARBON PER ASTM-D-1457	N/A
CENTER CONTACT	BERYLLIUM COPPER PER ASTM-B-196 OR ASTM-B-197, ALLOY C17300, CONDITION H	GOLD PLATE PER MIL-G-45204

UNLESS OTHERWISE SPECIFIED DIMENSIONS ARE IN INCHES
TOLERANCE ON
FRAC. ± 1/64 DEC. ±.005 ANGLES ± 1°

DRAWN BY D. CAM DATE 1-3-79
CHECKED BY KW 8 JAN79
APP'D BY GH 1-12-79

AMP M/A-COM

M/A-COM
a Division of AMP Incorporated
140 Fourth Avenue
Waltham, MA 02154-7577

These drawings and specifications are the property of M/A-COM Incorporated and shall not be reproduced or copied or used in whole or in part as the basis for the manufacture or sale of item(s) without written permission.

USE ASS'Y PROCEDURE

NO. A.P. N/A

TITLE HI FREQUENCY OSN JACK TO OSM JACK ADAPTER

SIZE	CODE IDENT NO.		REV
B	26805	3680-2240-00	02_1
SCALE 4 : 1			SHEET 1 OF 1

CUSTOMER DRAWING

AMP PART # 1058651-1
SHEET 1 OF 1 REV A