Chipsmall Limited consists of a professional team with an average of over 10 year of expertise in the distribution of electronic components. Based in Hongkong, we have already established firm and mutual-benefit business relationships with customers from,Europe,America and south Asia,supplying obsolete and hard-to-find components to meet their specific needs.

With the principle of “Quality Parts,Customers Priority,Honest Operation,and Considerate Service”,our business mainly focus on the distribution of electronic components. Line cards we deal with include Microchip,ALPS,ROHM,Xilinx,Pulse,ON,Everlight and Freescale. Main products comprise IC,Modules,Potentiometer,IC Socket,Relay,Connector.Our parts cover such applications as commercial,industrial, and automotives areas.

We are looking forward to setting up business relationship with you and hope to provide you with the best service and solution. Let us make a better world for our industry!

Contact us

Tel: +86-755-8981 8866 Fax: +86-755-8427 6832
Email & Skype: info@chipsmall.com Web: www.chipsmall.com
Address: A1208, Overseas Decoration Building, #122 Zhenhua RD., Futian, Shenzhen, China

THIS DRAWING IS UNPUBLISHED. RELEASED FOR PUBLICATION -,- .
© COPYRIGHT - By - ALL RIGHTS RESERVED.

LOC	DIST
H	—

REVISIONS

P	LTR	DESCRIPTION	DATE	DWN	APVD
	L3	REVISED PER ECR-11-023696	01DEC2011	A.S	M.W

CONNECTOR ASSEMBLY
EXEMPLARY LOADED

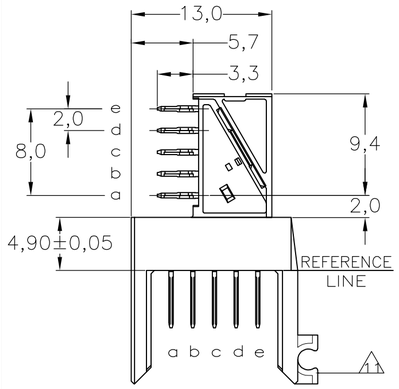

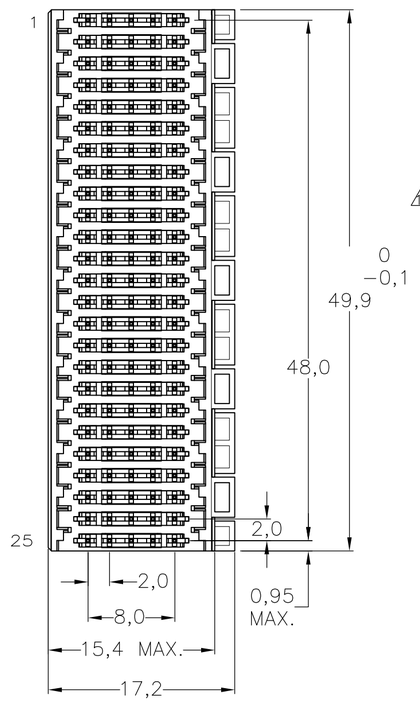

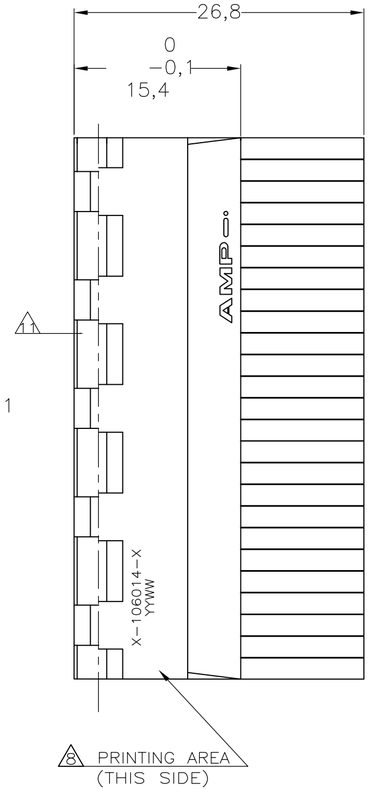

CONTACT DIMENSIONS

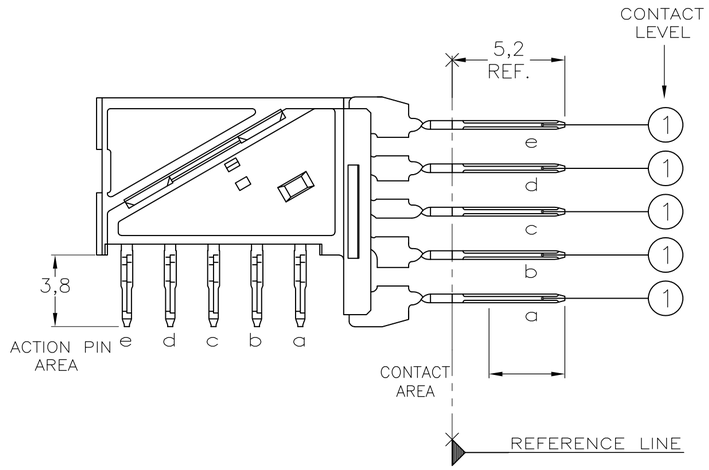

RECOMMENDED PCB-HOLE LAY-OUT
COMPONENT SIDE SHOWN

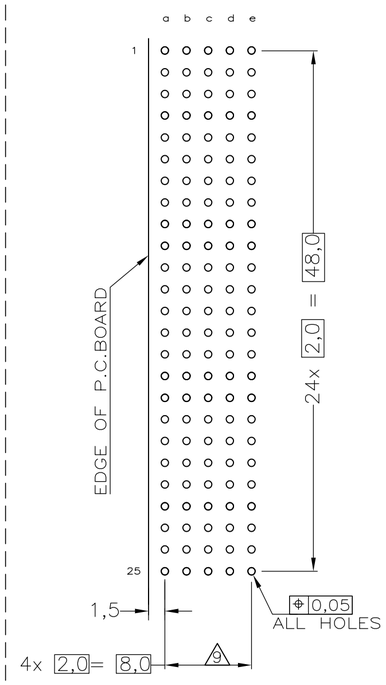

P.C.B. HOLE DIM. ACTION PIN
FOR DETAILS SEE
APPLICATION SPECIFICATION

CONTACT LAYOUT

	a	b	c	d	e
1	1	1	1	1	1
2	1	1	1	1	1
3	1	1	1	1	1
4	1	1	1	1	1
5	1	1	1	1	1
6	1	1	1	1	1
7	1	1	1	1	1
8	1	1	1	1	1
9	1	1	1	1	1
10	1	1	1	1	1
11	1	1	1	1	1
12	1	1	1	1	1
13	1	1	1	1	1
14	1	1	1	1	1
15	1	1	1	1	1
16	1	1	1	1	1
17	1	1	1	1	1
18	1	1	1	1	1
19	1	1	1	1	1
20	1	1	1	1	1
21	1	1	1	1	1
22	1	1	1	1	1
23	1	1	1	1	1
24	1	1	1	1	1
25	1	1	1	1	1

106014

NOTES:

1. MATERIAL HOUSING : GREY GLASSFILLED POLYESTER UL-RATING V0
   CONTACT : PHOSPHORBRONZE
2. GENERAL PLATING SPECIFICATION: UNDERPLATING (ENTIRE CONTACT): 1,27µm NICKEL MIN. AND ACTION PIN: 0,5µm TIN-LEAD MIN. FOR PLATING OF MATING SURFACES SEE APPLICABLE SPECIFICATION REFERENCE FOR EACH DASH NUMBER.
3. CONFORMS TO ALL TESTING ACCORDING IEC 61076-4-101 PERFORMANCE LEVEL 2.
4. CONFORMS TO ALL TESTING ACCORDING IEC 61076-4-101 PERFORMANCE LEVEL 1.
5. CONNECTOR TESTED AND QUALIFIED AGAINST TELCORDIA GR-1217-CORE QUALITY LEVEL III, CENTRAL OFFICE APPLICATIONS.
6. CONNECTOR TESTED AND QUALIFIED AGAINST TELCORDIA GR-1217-CORE QUALITY LEVEL III, UNCONTROLLED ENVIRONMENT APPLICATIONS.
7. CONNECTOR LUBRICATED WITH TELCORDIA GR-1217-CORE APPROVED LUBRICANT.
8. CONNECTOR MARKED WITH PARTNUMBER AND DATECODE
9. PLATED-THROUGH HOLES AT 2x2mm SQUARE GRID.

11. CONNECTOR ASSEMBLY WITH LATCH HINGE FOR CABLE CONNECTOR.

	CONSERVATION TREATMENT	CONTACT FINISH	PARTNUMBER
	Y 7	2 6	1-106014-9
	N	2 3	1-106014-1 11
	Y 7	2 5	106014-9
OBSOLETED	N	~~2 4~~	~~106014-4~~
	N	2 3	106014-1

THIS DRAWING IS A CONTROLLED DOCUMENT.

DIMENSIONS: mm

TOLERANCES UNLESS OTHERWISE SPECIFIED:
0 PLC ± 0.2
1 PLC ± 0.2
2 PLC ± 0.2
3 PLC ± 0.2
4 PLC ± 0.2
ANGLES ± -

MATERIAL -
FINISH -

DWN L.v.d.HEIJDEN 15DEC97
CHK D. TRUREN 15DEC97
APVD F.v.KONINGSBRUGGE -
PRODUCT SPEC 108-19082
APPLICATION SPEC 114-19029
WEIGHT -

TE Connectivity

NAME
Z-PACK 2MM HM TYPE B
125 POS. RIGHT ANGLE MALE
CONNECTOR ASSEMBLY

SIZE	CAGE CODE	DRAWING NO	RESTRICTED TO
A2	00779	C-106014	—

CUSTOMER DRAWING | SCALE NTS | SHEET 1 OF 1 | REV L3