Chipsmall Limited consists of a professional team with an average of over 10 year of expertise in the distribution of electronic components. Based in Hongkong, we have already established firm and mutual-benefit business relationships with customers from,Europe,America and south Asia,supplying obsolete and hard-to-find components to meet their specific needs.

With the principle of “Quality Parts,Customers Priority,Honest Operation,and Considerate Service”,our business mainly focus on the distribution of electronic components. Line cards we deal with include Microchip,ALPS,ROHM,Xilinx,Pulse,ON,Everlight and Freescale. Main products comprise IC,Modules,Potentiometer,IC Socket,Relay,Connector.Our parts cover such applications as commercial,industrial, and automotives areas.

We are looking forward to setting up business relationship with you and hope to provide you with the best service and solution. Let us make a better world for our industry!

Contact us

Tel: +86-755-8981 8866 Fax: +86-755-8427 6832
Email & Skype: info@chipsmall.com Web: www.chipsmall.com
Address: A1208, Overseas Decoration Building, #122 Zhenhua RD., Futian, Shenzhen, China

106152

ADAPTER P/N	MATERIAL OF SLEEVE
106152-0200	ZR
106156-0200	PHOSPHOR BRONZE
106152-0220*	ZR

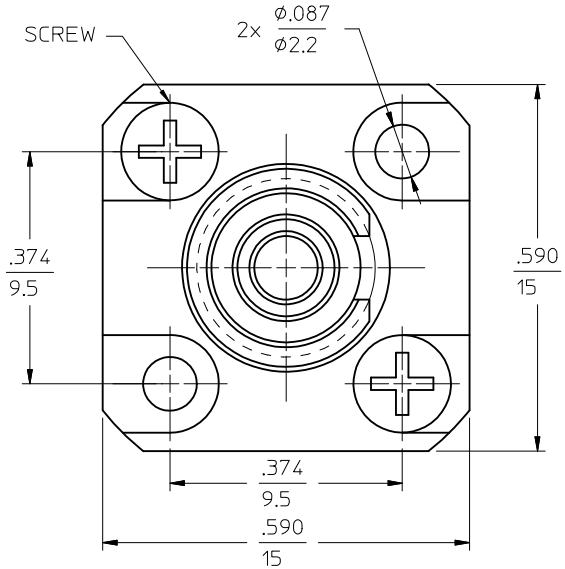

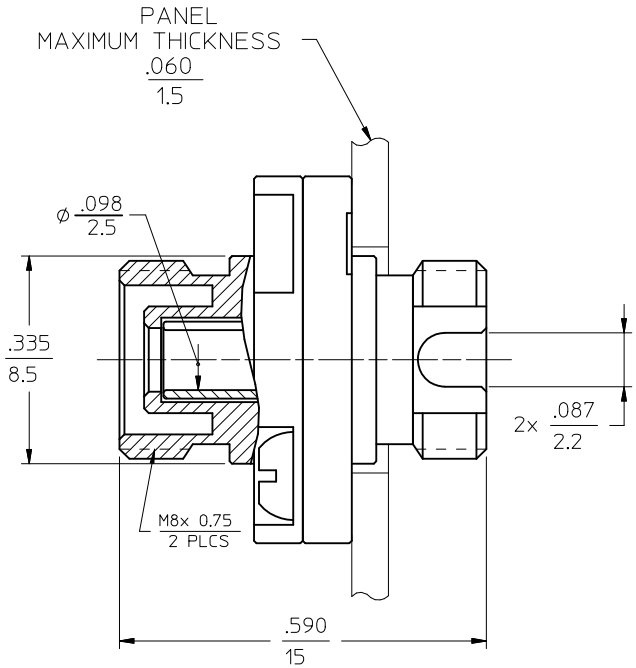

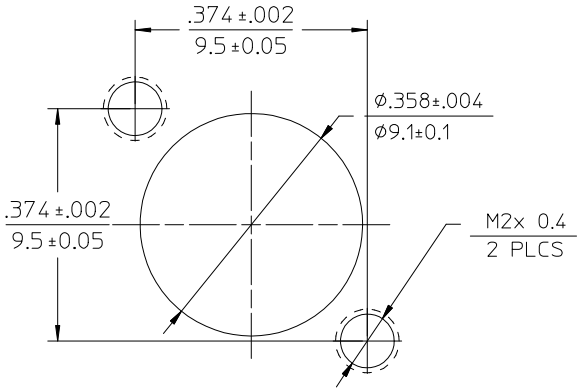

RECOMMENDED MOUNTING HOLES

NOTES:

1. ALL DIMENSIONS ARE GIVEN IN INCHES / mm.
2. DUST CAPS ARE NOT SHOWN.
*3. P/N 106152-0220 IS BULK PACKED IN QUANTITIES OF 100pcs.

ENTER DESCRIPTION
EC NO: MF2012-0450 2012/03/20
DRWN:KPEYZNER 2012/03/20
CH'KD:
APPR: IGUMIN
DESCRIPTION
A1
REV

QUALITY SYMBOLS
▼=0
Ⓒ=0

GENERAL TOLERANCES (UNLESS SPECIFIED)

	mm	INCH
4 PLACES	± ---	± ---
3 PLACES	± ---	± ---
2 PLACES	± ---	± ---
1 PLACE	± ---	± ---
0 PLACE	±	±

ANGULAR ±1/2°
DRAFT WHERE APPLICABLE MUST REMAIN WITHIN DIMENSIONS

DIMENSION STYLE: IN/MM
SCALE: 5:1
DESIGN UNITS: INCH
THIRD ANGLE PROJECTION

DRAWN BY: KP DATE: 2007/02/09
CHECKED BY DATE
APPROVED BY DATE: 2007/02/09

TITLE: FC ADAPTER

molex

MATERIAL NO.: SEE TABLE
DOCUMENT NO.: SD-106152-0200
SHEET NO.: 1 OF 1
SIZE: B

THIS DRAWING CONTAINS INFORMATION THAT IS PROPRIETARY TO MOLEX INCORPORATED AND SHOULD NOT BE USED WITHOUT WRITTEN PERMISSION