Chipsmall Limited consists of a professional team with an average of over 10 year of expertise in the distribution of electronic components. Based in Hongkong, we have already established firm and mutual-benefit business relationships with customers from,Europe,America and south Asia,supplying obsolete and hard-to-find components to meet their specific needs.

With the principle of “Quality Parts,Customers Priority,Honest Operation,and Considerate Service”,our business mainly focus on the distribution of electronic components. Line cards we deal with include Microchip,ALPS,ROHM,Xilinx,Pulse,ON,Everlight and Freescale. Main products comprise IC,Modules,Potentiometer,IC Socket,Relay,Connector.Our parts cover such applications as commercial,industrial, and automotives areas.

We are looking forward to setting up business relationship with you and hope to provide you with the best service and solution. Let us make a better world for our industry!

Contact us

Tel: +86-755-8981 8866 Fax: +86-755-8427 6832
Email & Skype: info@chipsmall.com Web: www.chipsmall.com
Address: A1208, Overseas Decoration Building, #122 Zhenhua RD., Futian, Shenzhen, China

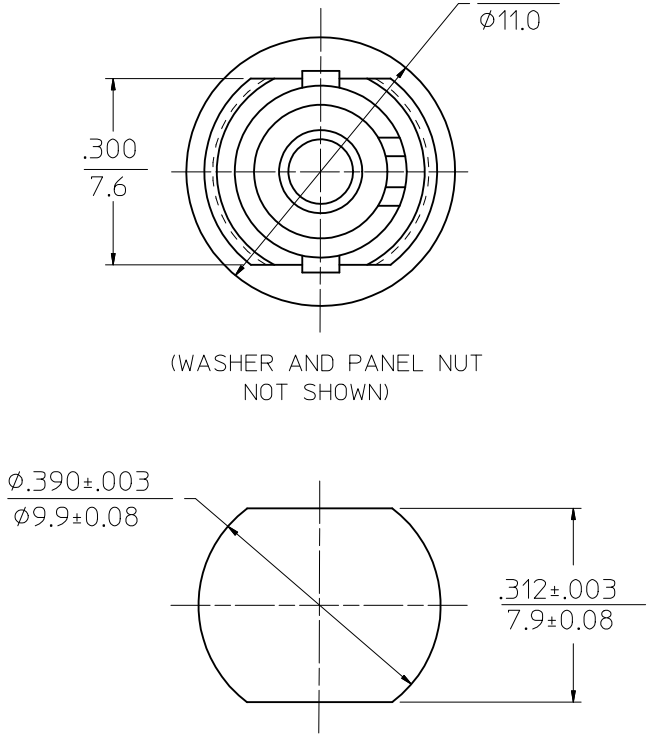

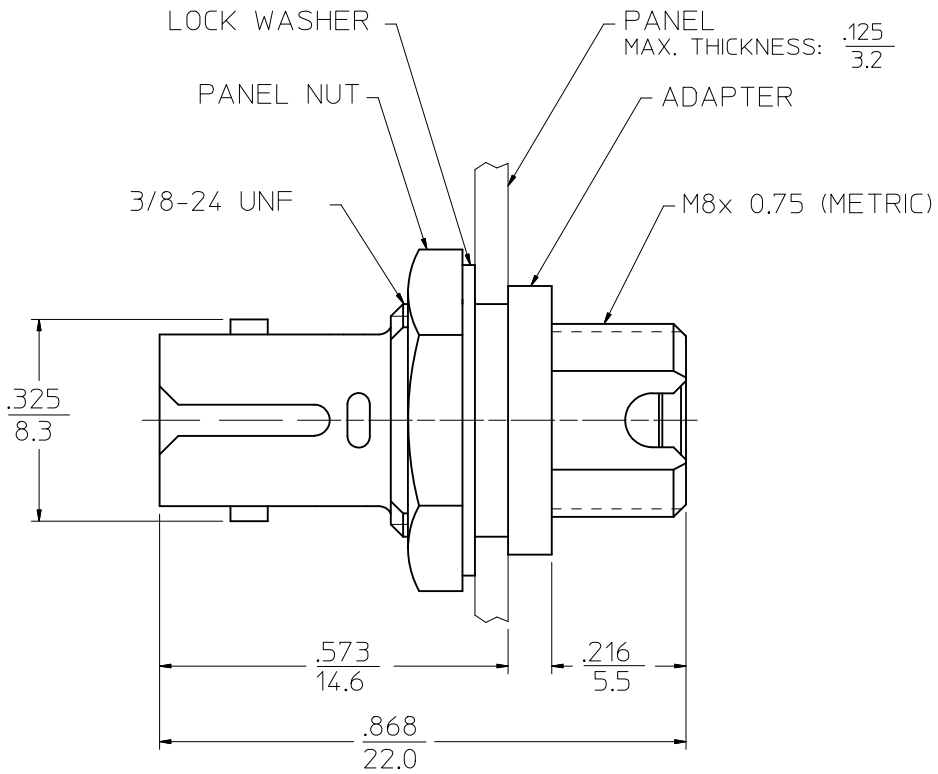

ENTER DESCRIPTION	EC NO: MF2006-0767	DRWN: DBALTRUKONIS 2006/05/22	CH'KD: 2006/05/22
APPR: IGUMIN 2006/05/24	DESCRIPTION	REV	B

QUALITY SYMBOLS: ▼=0 ▽=0

GENERAL TOLERANCES (UNLESS SPECIFIED)	mm	INCH
4 PLACES	± ---	± ---
3 PLACES	± ---	± ---
2 PLACES	± ---	± ---
1 PLACE	± ---	± ---
ANGULAR ±1/2°		

DRAFT WHERE APPLICABLE MUST REMAIN WITHIN DIMENSIONS

DIMENSION STYLE: IN/MM	SCALE: 5:1	DESIGN UNITS: INCH	THIRD ANGLE PROJECTION
DRAWN BY: PGIBLIN	DATE: 2005/10/18	TITLE: ST-FC TYPE ADAPTER	
CHECKED BY	DATE		
APPROVED BY	DATE	molex MOLEX INCORPORATED	
MATERIAL NO.: 1061720000		DOCUMENT NO.: SD-106172-0000	SHEET NO.: 1 OF 01
SIZE: B	THIS DRAWING CONTAINS INFORMATION THAT IS PROPRIETARY TO MOLEX INCORPORATED AND SHOULD NOT BE USED WITHOUT WRITTEN PERMISSION		

tb_frame_B_P_ME_T
Rev. D 2004/04/02