Chipsmall Limited consists of a professional team with an average of over 10 year of expertise in the distribution of electronic components. Based in Hongkong, we have already established firm and mutual-benefit business relationships with customers from,Europe,America and south Asia,supplying obsolete and hard-to-find components to meet their specific needs.

With the principle of “Quality Parts,Customers Priority,Honest Operation,and Considerate Service”,our business mainly focus on the distribution of electronic components. Line cards we deal with include Microchip,ALPS,ROHM,Xilinx,Pulse,ON,Everlight and Freescale. Main products comprise IC,Modules,Potentiometer,IC Socket,Relay,Connector.Our parts cover such applications as commercial,industrial, and automotives areas.

We are looking forward to setting up business relationship with you and hope to provide you with the best service and solution. Let us make a better world for our industry!

Contact us

Tel: +86-755-8981 8866 Fax: +86-755-8427 6832
Email & Skype: info@chipsmall.com Web: www.chipsmall.com
Address: A1208, Overseas Decoration Building, #122 Zhenhua RD., Futian, Shenzhen, China

ITEM NO.	PART NUMBER	DESCRIPTION	QTY.	COMPONENT NOTES
1	TLY-13	NEMA 5-15P	1	black overmold
2	TLY-18L	C13 female, 90°	1	black overmold
3	30-00244	Wire, 3C, 18 AWG, UL SVT, 300V, 105C, 6.3 mm, VW-1, PVC	1	
4	Label	Adhesive flag, 15x100 mm	1	white with black font

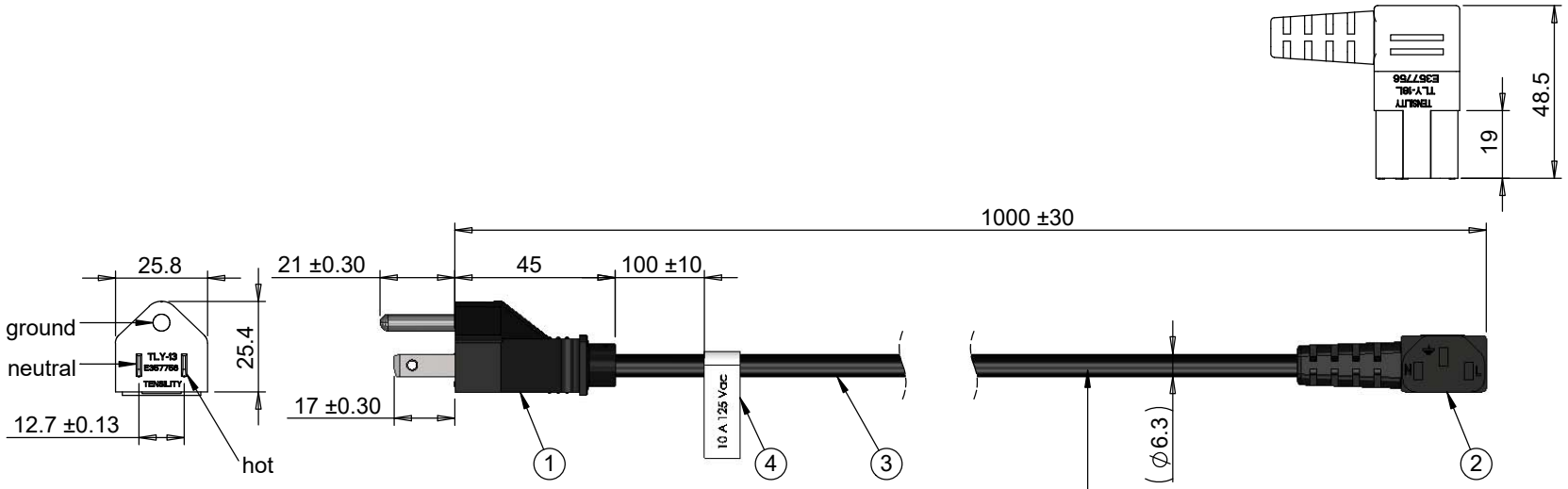

Wire marking: (UL) E339575 SVT 3X0.824mm2
(18AWG) 105C 300V VW-1 C(UL) SVT 3X0.824mm2
(18AWG) 105C 300V VW-1 TENSILITY HLE

Wiring Diagram		
TLY-13	wire color	TLY-18L
hot	black	line
neutral	white	neutral
ground	green	ground

Notes:
Electrical requirements: 10 A at 125 Vac

Revision:	Date:	Description:
A	12/20/2012	Initial release

Prepared: DN — Digitally signed by DN Date: 2017.01.25 07:40:52 -08'00'

Verified: PS — Digitally signed by PS Date: 2017.01.26 15:00:44 -08'00'

Dimensions are in millimeters.
Tolerances:
X: ± 0.5 mm
X.X: ± 0.3 mm
X.XX: ± 0.05 mm

Notes:
RoHS and REACH compliant

Function test: no open, no short circuit, no intermittent

Description:
Ac cord, 1000 mm, U.S, NEMA 5-15P plug, TLY-13 to 90° C13, TLY-18L, 18 AWG, SVT wire, 30-00244

TENSILITY
tel 1.541.323.3228 800 877.670.7118
fax 1.541.323.4202 web tensility.com

Size: A
Part number: 11-00023
Scale: 1:2
Sheet 1 of 1

5 4 3 2 1