Chipsmall Limited consists of a professional team with an average of over 10 year of expertise in the distribution of electronic components. Based in Hongkong, we have already established firm and mutual-benefit business relationships with customers from,Europe,America and south Asia,supplying obsolete and hard-to-find components to meet their specific needs.

With the principle of “Quality Parts,Customers Priority,Honest Operation,and Considerate Service”,our business mainly focus on the distribution of electronic components. Line cards we deal with include Microchip,ALPS,ROHM,Xilinx,Pulse,ON,Everlight and Freescale. Main products comprise IC,Modules,Potentiometer,IC Socket,Relay,Connector.Our parts cover such applications as commercial,industrial, and automotives areas.

We are looking forward to setting up business relationship with you and hope to provide you with the best service and solution. Let us make a better world for our industry!

Contact us

Tel: +86-755-8981 8866 Fax: +86-755-8427 6832
Email & Skype: info@chipsmall.com Web: www.chipsmall.com
Address: A1208, Overseas Decoration Building, #122 Zhenhua RD., Futian, Shenzhen, China

THIS DRAWING IS UNPUBLISHED. RELEASED FOR PUBLICATION – ,N/A .
© COPYRIGHT N/A By – ALL RIGHTS RESERVED.

LOC	DIST
DF	FO

REVISIONS

P	LTR	DESCRIPTION	DATE	DWN	APVD
	J	TYCO LOGO REPLACED WITH THE AMP BRAND LOGO	28APR11	CT	DH

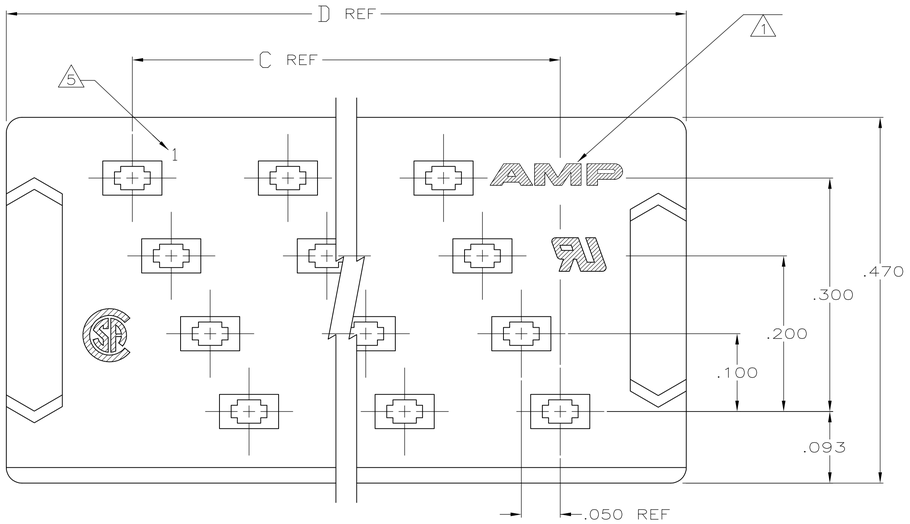

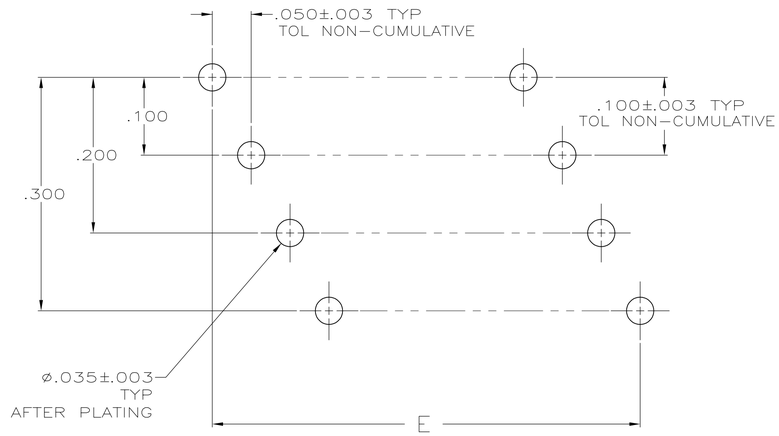

RECOMMENDED HOLE LAYOUT

1. AMP TRADEMARK LOCATED IN APPROX AREA SHOWN.
2. STANDOFFS: POSN 12 (9) STANDOFFS AS SHOWN.
   POSN 16 (12) STANDOFFS, 3 PER DIAGONAL ROW.
   POSN 20 (15) STANDOFFS, 3 PER DIAGONAL ROW.
   POSN 24 (18) STANDOFFS, 3 PER DIAGONAL ROW.
   POSN 28 (21) STANDOFFS, 3 PER DIAGONAL ROW.
   POSN 32 (24) STANDOFFS, 3 PER DIAGONAL ROW.
   POSN 36 (27) STANDOFFS, 3 PER DIAGONAL ROW.
   POSN 40 (30) STANDOFFS, 3 PER DIAGONAL ROW.
   POSN 44 (33) STANDOFFS, 3 PER DIAGONAL ROW.
   POSN 48 (36) STANDOFFS, 3 PER DIAGONAL ROW.
   POSN 52 (39) STANDOFFS, 3 PER DIAGONAL ROW.
   POSN 56 (42) STANDOFFS, 3 PER DIAGONAL ROW.
   POSN 60 (45) STANDOFFS, 3 PER DIAGONAL ROW.
3. FINISH: BRIGHT TIN–LEAD .000100–.000200 THK OVER NICKEL .000050 MIN THK.
4. HEIGHT AFTER TERMINATION IS .238 REF.
5. CAVITY IDENTIFICATION MOLDED IN THIS AREA.
6. FINISH: BRIGHT TIN .000100–.000200 THK OVER NICKEL .000050 MIN THK.

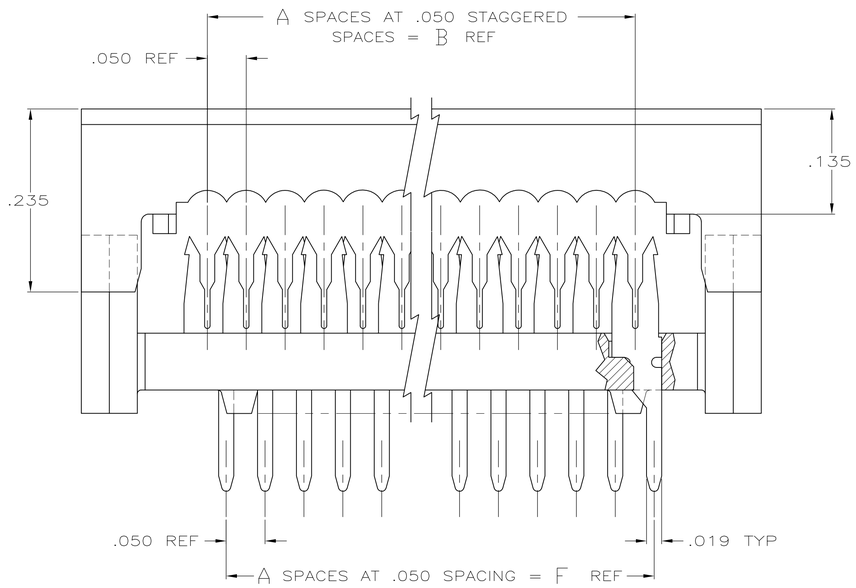

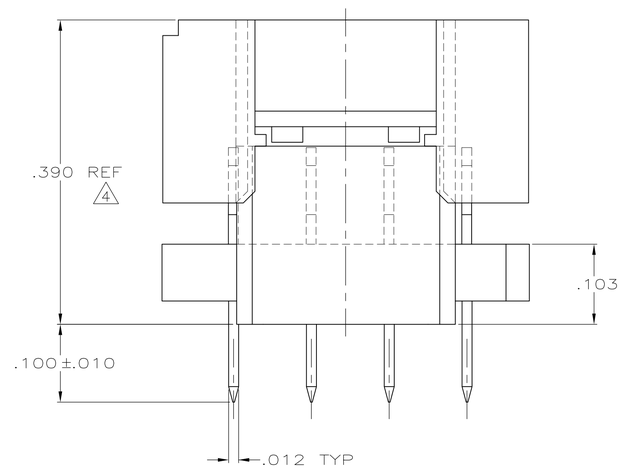

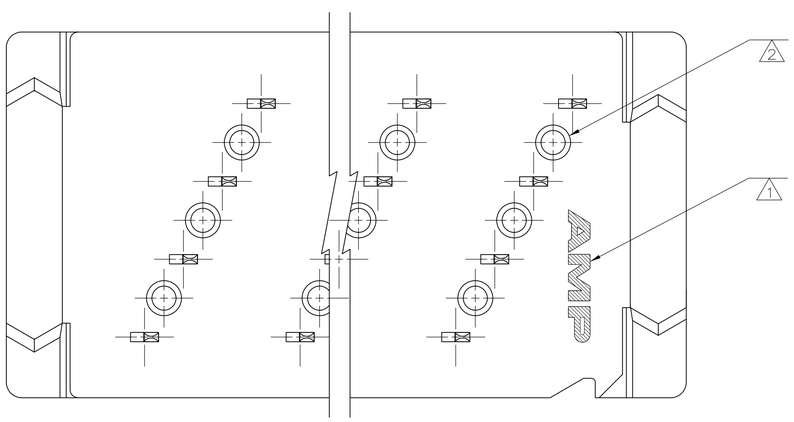

	6	2.950	2.950	3.274	2.950	2.950	59	60	6–111035–3
	6	2.150	2.150	2.474	2.150	2.150	43	44	5–111035–9
	6	1.950	1.950	2.274	1.950	1.950	39	40	5–111035–8
	6	1.750	1.750	2.074	1.750	1.750	35	36	5–111035–7
	6	1.550	1.550	1.874	1.550	1.550	31	32	5–111035–6
	6	1.150	1.150	1.474	1.150	1.150	23	24	5–111035–4
	6	.950	.950	1.274	.950	.950	19	20	5–111035–3
	6	.750	.750	1.074	.750	.750	15	16	5–111035–2
	3	2.950	2.950	3.274	2.950	2.950	59	60	1–111035–3
OBSOLETE	3	2.750	2.750	3.074	2.750	2.750	55	56	1–111035–2
OBSOLETE	3	2.550	2.550	2.874	2.550	2.550	51	52	1–111035–1
OBSOLETE	3	2.350	2.350	2.674	2.350	2.350	47	48	1–111035–0
	3	2.150	2.150	2.474	2.150	2.150	43	44	111035–9
	3	1.950	1.950	2.274	1.950	1.950	39	40	111035–8
	3	1.750	1.750	2.074	1.750	1.750	35	36	111035–7
	3	1.550	1.550	1.874	1.550	1.550	31	32	111035–6
OBSOLETE	3	1.350	1.350	1.674	1.350	1.350	27	28	111035–5
	3	1.150	1.150	1.474	1.150	1.150	23	24	111035–4
	3	.950	.950	1.274	.950	.950	19	20	111035–3
	3	.750	.750	1.074	.750	.750	15	16	111035–2
OBSOLETE	3	.550	.550	.874	.550	.550	11	12	111035–1
	FINISH	F	E	D	C	B	A	NO OF POSN	PART NUMBER

THIS DRAWING IS A CONTROLLED DOCUMENT.

DIMENSIONS: INCHES

TOLERANCES UNLESS OTHERWISE SPECIFIED:
0 PLC ± –
1 PLC ± –
2 PLC ± –
3 PLC ± .005
4 PLC ± –
ANGLES ± –

MATERIAL
MOLDED PARTS: 94V-0 RATED THERMOPLASTIC, COLOR BLACK
CONTACTS: PH BRZ PER QQ-B-750

FINISH
CONTACTS 3

DWN J. PEACHEY 05-MAR-86
CHK M.SCULLY 23-MAY-86
APVD D.HOFFMAN 23-MAY-86

PRODUCT SPEC –
APPLICATION SPEC 114-40005
WEIGHT –

TE Connectivity

NAME
KIT, AMP-LATCH PADDLEBOARD
PREASSEMBLED, .100 LONG POSTS
FULL ROW, FULL TIN PLATED CONTACTS

SIZE	CAGE CODE	DRAWING NO	RESTRICTED TO
A1	00779	C-111035	–

CUSTOMER DRAWING | SCALE 10:1 | SHEET 1 OF 1 | REV J

4805 (3/11)