Chipsmall Limited consists of a professional team with an average of over 10 year of expertise in the distribution of electronic components. Based in Hongkong, we have already established firm and mutual-benefit business relationships with customers from,Europe,America and south Asia,supplying obsolete and hard-to-find components to meet their specific needs.

With the principle of “Quality Parts,Customers Priority,Honest Operation,and Considerate Service”,our business mainly focus on the distribution of electronic components. Line cards we deal with include Microchip,ALPS,ROHM,Xilinx,Pulse,ON,Everlight and Freescale. Main products comprise IC,Modules,Potentiometer,IC Socket,Relay,Connector.Our parts cover such applications as commercial,industrial, and automotives areas.

We are looking forward to setting up business relationship with you and hope to provide you with the best service and solution. Let us make a better world for our industry!

Contact us

Tel: +86-755-8981 8866 Fax: +86-755-8427 6832
Email & Skype: info@chipsmall.com Web: www.chipsmall.com
Address: A1208, Overseas Decoration Building, #122 Zhenhua RD., Futian, Shenzhen, China

MATERIAL NUMBER	ENG NO.	DESCRIPTION	INSULATOR KEYING POSITION	HORSEPOWER RATING
1122191015	ARC30MHDA01	ARC 30A MHD 125VAC 1P+N+G	7	1 HP
1122191016	ARC30MHDB02	ARC 30A MHD 250VAC 2P+G		3 HP
1122191017	ARC30MHDB03	ARC 30A MHD 250VAC 3P+G		5 HP
1122191018	ARC30MHDAB04	ARC 30A MHD 125/250VAC 2P+N+G		NA
1122191019	ARC30MHDC02	ARC 30A MHD 208VAC 2P+G	16	NA
1122191020	ARC30MHDC03	ARC 30A MHD 208VAC 3P+G		5 HP
1122191021	ARC30MHDAC05	ARC 30A MHD 120/208VAC 3P+N+G		NA
1122191022	ARC30MHDD01	ARC 30A MHD 277VAC 1P+N+G	4	NA
1122191023	ARC30MHDE02	ARC 30A MHD 480VAC 2P+G		NA
1122191024	ARC30MHDE03	ARC 30A MHD 480VAC 3P+G		NA
1122191025	ARC30MHDDE05	ARC 30A MHD 277/480VAC 3P+N+G		NA
1122191026	ARC30MHDF02	ARC 30A MHD 600VAC 2P+G	14	NA
1122191027	ARC30MHDF03	ARC 30A MHD 600VAC 3P+G		NA
1122191028	ARC30MHDGF05	ARC 30A MHD 347/600VAC 3P+N+G		NA

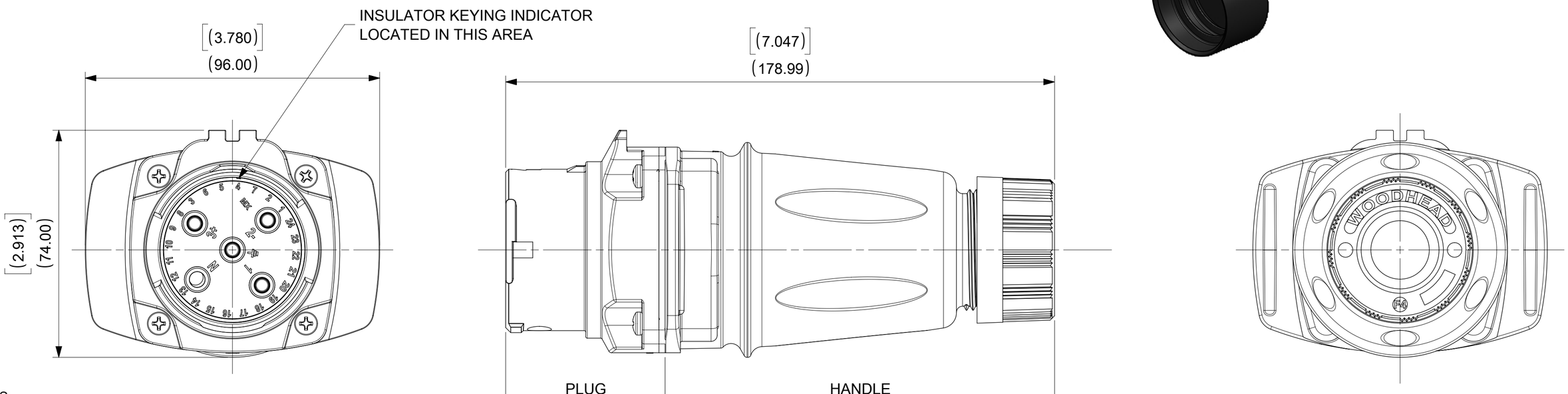

NOTES:

MATERIALS:
- HOUSINGS AND INSULATORS: GLASS FILLED PBT
- CONTACTS: COPPER ALLOY WITH A SILVER NICKEL TIP, SILVER PLATED
- MOUNTING GASKETS: SILICONE
- GROMMET - RUBBER
- FRICTION RING - NATURAL POLYETHYLENE
- COMPRESSION NUT - BLACK PBT
- SELF TAPPING SCREWS - STAINLESS STEEL
- PLUG CAP - RUBBER

RATINGS:
- CURRENT: 30 AMPS
- VOLTAGE AND HORSEPOWER: SEE TABLE
- OPERATING TEMPERATURE: -25°C(-13°F) TO 60°C(140°F)
- ENVIRONMENTAL: NEMA TYPE 4X
- WIRING CAPACITY: 12 AWG MIN. TO 8 AWG MAX.
- TORQUE TERMINAL SCREWS TO 1.7N-M (15 in/lbs)
- AGENCY: UL LISITING PENDING
  - SWITCH RATED RECEPTACLE/CONNECTOR
  - BRANCH CIRCUIT DISCONNECT SWITCH
  - MOTOR CIRCUIT DISCONNECT SWITCH IF HP RATED

PLUG, HANDLE AND PLUG CAP(NOT SHOWN IN ALL VIEWS) ARE PACKAGED AS SUB-ASSEMBLIES AND WILL REQUIRE END USER ASSEMBLY.

THIS DRAWING REPLACES SD-112219-102

GROMMET P/N	GROMMET COLOR	CABLE DIAMETER RANGE
1301800411	GRAY	12.7mm - 15.9mm (0.500" - 0.625")
1301800283	ORANGE	15.9mm - 19.0mm (0.625" - 0.750")
1301800413	BLACK	19.0mm - 22.2mm (0.750" - 0.875")

ARC30MHDE03 SHOWN

THIS DRAWING CONTAINS INFORMATION THAT IS PROPRIETARY TO MOLEX ELECTRONIC TECHNOLOGIES, LLC AND SHOULD NOT BE USED WITHOUT WRITTEN PERMISSION

QUALITY SYMBOLS: = 0

REDRAWN IN NX 2018/04/03
EC NO: 176476 2018/05/10
DRWN: VBASUTHKARP 2018/05/10
CHK'D: BRUPERT
APPR: BRUPERT
REV B1

GENERAL TOLERANCES (UNLESS SPECIFIED)

	MM	INCH
4 PLACES	±	±
3 PLACES	±	± .005
2 PLACES	± 0.13	± .010
1 PLACES	± 0.25	± .020
0 PLACES	±	±

ANGULAR TOL ± 0.5°

DRAFT WHERE APPLICABLE MUST REMAIN WITHIN DIMENSIONS

DIMENSION UNITS: MM[INCH]
SCALE: 1:1
DRWN BY: KJ DATE: 08/29/2017
CHK'D BY: BR DATE: 08/29/2017
APPR BY: JM DATE: 08/29/2017
DRAWING SIZE: C
THIRD ANGLE PROJECTION

molex®

30A ArcArrest™
PLUG KIT
HANDLE W/DRAWPLATES

PRODUCT CUSTOMER DRAWING

SERIES	MATERIAL NUMBER	CUSTOMER
112219	SEE TABLE	GENERAL MARKET

DOCUMENT NUMBER	DOC TYPE	DOC PART	SHEET NUMBER
1122191024	PSD	000	1 OF 1

RELEASE STATUS	P1	RELEASE DATE	2018/05/10 16:43:19

FORMAT: Eng-lega-master-tb-prod-C
REVISION: C
DATE: 2017/02/06