Chipsmall Limited consists of a professional team with an average of over 10 year of expertise in the distribution of electronic components. Based in Hongkong, we have already established firm and mutual-benefit business relationships with customers from,Europe,America and south Asia,supplying obsolete and hard-to-find components to meet their specific needs.

With the principle of “Quality Parts,Customers Priority,Honest Operation,and Considerate Service”,our business mainly focus on the distribution of electronic components. Line cards we deal with include Microchip,ALPS,ROHM,Xilinx,Pulse,ON,Everlight and Freescale. Main products comprise IC,Modules,Potentiometer,IC Socket,Relay,Connector.Our parts cover such applications as commercial,industrial, and automotives areas.

We are looking forward to setting up business relationship with you and hope to provide you with the best service and solution. Let us make a better world for our industry!

Contact us

Tel: +86-755-8981 8866 Fax: +86-755-8427 6832
Email & Skype: info@chipsmall.com Web: www.chipsmall.com
Address: A1208, Overseas Decoration Building, #122 Zhenhua RD., Futian, Shenzhen, China

MATERIAL NUMBER	ENG NO.	DESCRIPTION	INSULATING KEYING POSITION	HORSEPOWER RATING
1122191029	ARC30MHA01	ARC 30A MH 125VAC 1P+N+G	7	1 HP
1122191030	ARC30MHB02	ARC 30A MH 250VAC 2P+G		3 HP
1122191031	ARC30MHB03	ARC 30A MH 250VAC 3P+G		5 HP
1122191032	ARC30MHAB04	ARC 30A MH 125/250VAC 2P+N+G		NA
1122191033	ARC30MHC02	ARC 30A MH 208VAC 2P+G	16	NA
1122191034	ARC30MHC03	ARC 30A MH 208VAC 3P+G		5 HP
1122191035	ARC30MHAC05	ARC 30A MH 120/208VAC 3P+N+G		NA
1122191036	ARC30MHD01	ARC 30A MH 277VAC 1P+N+G	4	NA
1122191037	ARC30MHE02	ARC 30A MH 480VAC 2P+G		NA
1122191038	ARC30MHE03	ARC 30A MH 480VAC 3P+G		NA
1122191039	ARC30MHDE05	ARC 30A MH 277/480VAC 3P+N+G		NA
1122191040	ARC30MHF02	ARC 30A MH 600VAC 2P+G	14	NA
1122191041	ARC30MHF03	ARC 30A MH 600VAC 3P+G		NA
1122191042	ARC30MHGF05	ARC 30A MH 347/600VAC 3P+N+G		NA

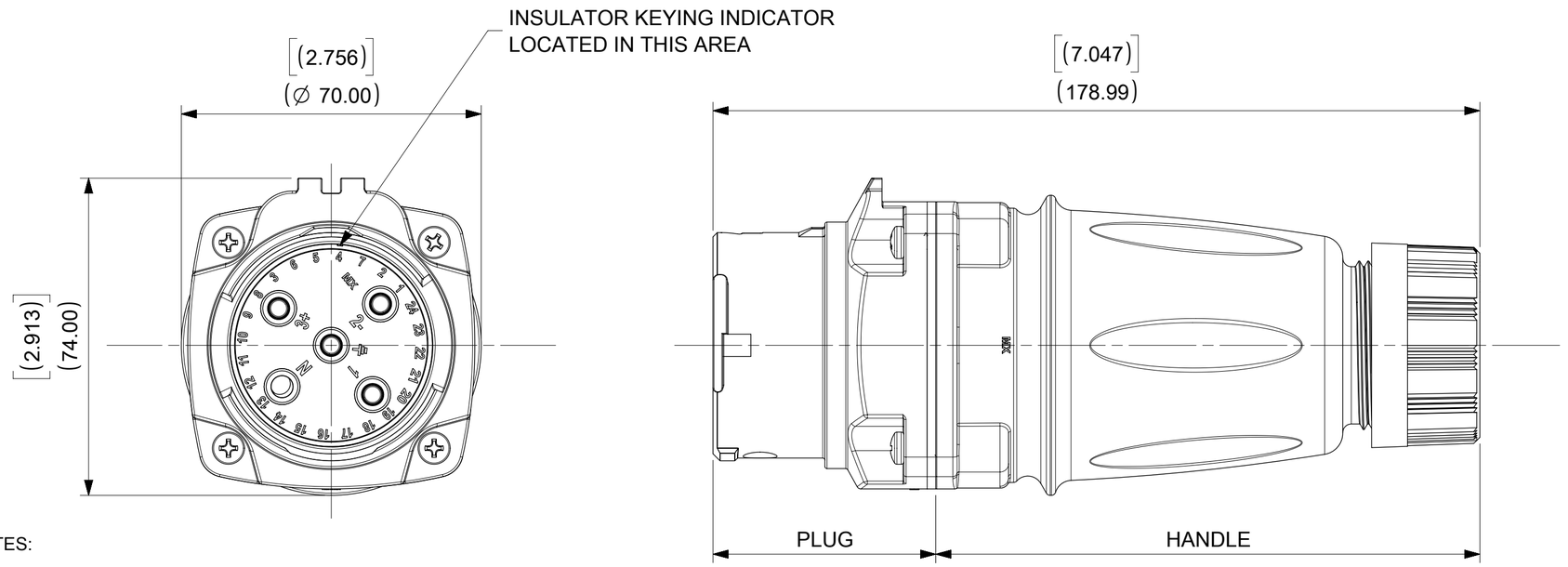

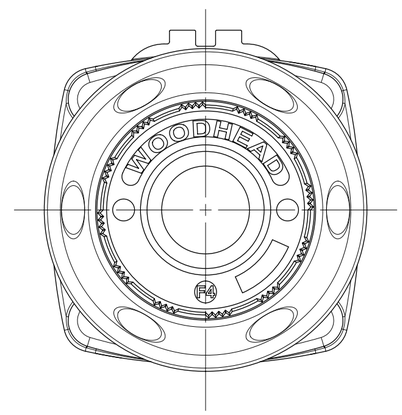

NOTES:

MATERIALS:
- HOUSINGS AND INSULATORS: GLASS FILLED PBT
- CONTACTS: COPPER ALLOY WITH A SILVER NICKEL TIP, SILVER PLATED
- MOUNTING GASKETS: SILICONE
- GROMMET - RUBBER
- FRICTION RING - NATURAL POLYETHYLENE
- COMPRESSION NUT - BLACK PBT
- SELF TAPPING SCREWS - STAINLESS STEEL
- PLUG CAP - RUBBER

RATINGS:
- CURRENT: 30 AMPS
- VOLTAGE AND HORSEPOWER: SEE TABLE
- OPERATING TEMPERATURE: -25°C(-13°F) TO 60°C(140°F)
- ENVIRONMENTAL: NEMA TYPE 4X
- WIRING CAPACITY: 12 AWG MIN. TO 8 AWG MAX.
- TORQUE TERMINAL SCREWS TO 1.7N-M (15 in/lbs)
- AGENCY: UL LISITING PENDING
  - SWITCH RATED RECEPTACLE/CONNECTOR
  - BRANCH CIRCUIT DISCONNECT SWITCH
  - MOTOR CIRCUIT DISCONNECT SWITCH IF HP RATED

PLUG, HANDLE AND PLUG CAP(NOT SHOWN IN ALL VIEWS) ARE PACKAGED AS SUB-ASSEMBLIES AND WILL REQUIRE END USER ASSEMBLY.

THIS DRAWING REPLACES SD-112219-103.

GROMMET P/N	GROMMET COLOR	CABLE DIAMETER RANGE
1301800411	GRAY	12.7mm - 15.9mm (0.500" - 0.625")
1301800283	ORANGE	15.9mm - 19.0mm (0.625" - 0.750")
1301800413	BLACK	19.0mm - 22.2mm (0.750" - 0.875")

ARC30MHE03 SHOWN

THIS DRAWING CONTAINS INFORMATION THAT IS PROPRIETARY TO MOLEX ELECTRONIC TECHNOLOGIES, LLC AND SHOULD NOT BE USED WITHOUT WRITTEN PERMISSION

QUALITY SYMBOLS: FA = 0; FC = 0; FD = 0; ▼ = 0; C = 0; ☒ = 0; ■ = 0; V = 0

REDRAWN IN NX 2018/04/03
EC NO: 176476 2018/05/10
DRWN: VBASUTHKARP 2018/05/10
CHK'D: BRUPERT
APPR: BRUPERT
REV B1

GENERAL TOLERANCES (UNLESS SPECIFIED)

	MM	INCH
4 PLACES	±	±
3 PLACES	±	± .005
2 PLACES	± 0.13	± .010
1 PLACES	± 0.25	± .020
0 PLACES	±	±

ANGULAR TOL ± 0.5°

DRAFT WHERE APPLICABLE MUST REMAIN WITHIN DIMENSIONS

DIMENSION UNITS: MM[INCH]
SCALE: 1:1
DRWN BY: KJ DATE: 09/20/2017
CHK'D BY: BR DATE: 09/20/2017
APPR BY: JM DATE: 09/20/2017
DRAWING SIZE: C
THIRD ANGLE PROJECTION

molex®

30A ArcArrest™
PLUG KIT
HANDLE W/O DRAWPLATES

PRODUCT CUSTOMER DRAWING

SERIES	MATERIAL NUMBER	CUSTOMER
112219	SEE TABLE	GENERAL MARKET

DOCUMENT NUMBER	DOC TYPE	DOC PART	SHEET NUMBER
1122191038	PSD	000	1 OF 1

RELEASE STATUS	P1	RELEASE DATE	2018/05/10 16:43:20

FORMAT: Eng-lega-master-tb-prod-C
REVISION: C
DATE: 2017/02/06