Chipsmall Limited consists of a professional team with an average of over 10 year of expertise in the distribution of electronic components. Based in Hongkong, we have already established firm and mutual-benefit business relationships with customers from,Europe,America and south Asia,supplying obsolete and hard-to-find components to meet their specific needs.

With the principle of “Quality Parts,Customers Priority,Honest Operation,and Considerate Service”,our business mainly focus on the distribution of electronic components. Line cards we deal with include Microchip,ALPS,ROHM,Xilinx,Pulse,ON,Everlight and Freescale. Main products comprise IC,Modules,Potentiometer,IC Socket,Relay,Connector.Our parts cover such applications as commercial,industrial, and automotives areas.

We are looking forward to setting up business relationship with you and hope to provide you with the best service and solution. Let us make a better world for our industry!

Contact us

Tel: +86-755-8981 8866 Fax: +86-755-8427 6832
Email & Skype: info@chipsmall.com Web: www.chipsmall.com
Address: A1208, Overseas Decoration Building, #122 Zhenhua RD., Futian, Shenzhen, China

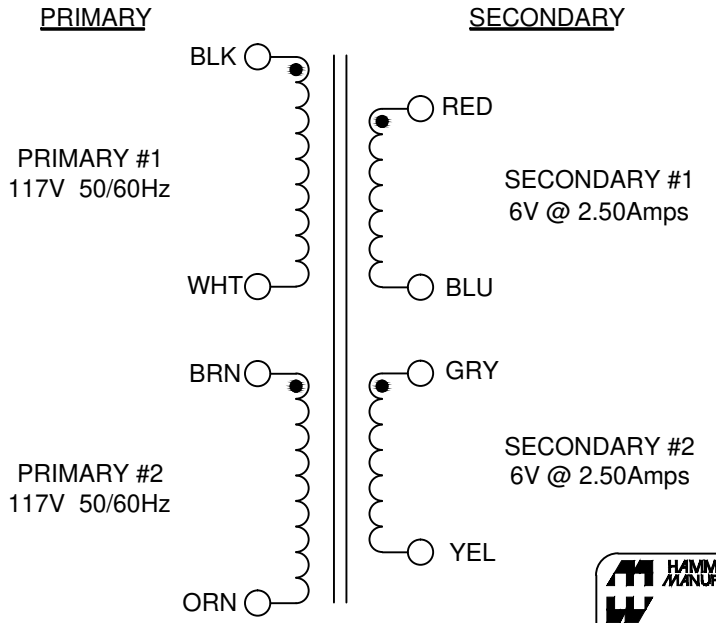

PRIMARY LEADS ARE #20 TEW

SECONDARY LEADS ARE #18 TEW

ALL LEADS OUT 8"-9" AND STRIPPED 0.5" MIN.

WEIGHT: 0.94Lbs +/- 4%

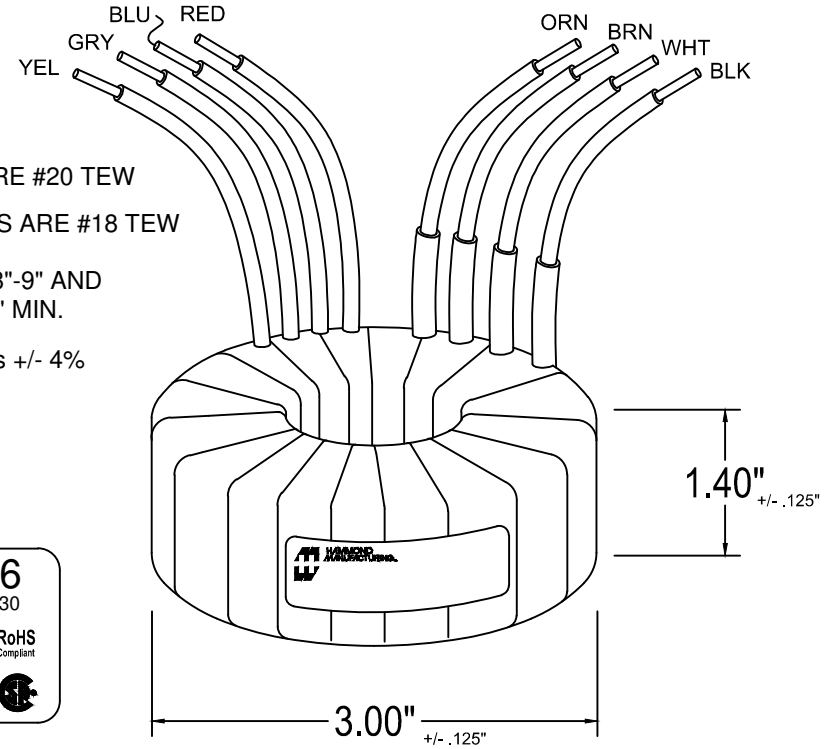

HAMMOND MANUFACTURING

1182L6

50/60Hz VA:30

PRI: 2x 117V BLK-WHT, BRN-ORN

SEC: 2x 6V @ 2.50A RED-BLU, GRY-YEL

RoHS Compliant

1A0030A000C006006

MADE IN CANADA DATE PB

SUPPLIED WITH: TWO 0.062" T X 2.50" OD RUBBER WASHERS.
ONE 18GA X 2.375" OD STEEL MOUNTING WASHER.
ONE 10-24 BOLT 1.75" LONG WITH A LOCK WASHER AND 10-24 HEX NUT.

ELECTRICAL DATA:

TESTS	CONDITIONS	ACCEPTANCE CRITERIA
Sec. N.L.V	@ 117V, 60Hz	
	BLK & BRN to WHT & ORN	
OR	@ 234V, 50Hz	
	BLK to ORN (Connect BRN & WHT)	
	RED - BLU	6.70 V ±2%
	GRY - YEL	6.70 V ±2%
POLARITY	BLK, BRN, RED and GRY.	ADDITIVE
DCR	BLK - WHT	41.560 Ohms ±20%
IN OHMS	BRN - ORN	41.560 Ohms ±20%
	RED - BLU	0.120 Ohms ±20%
	GRY - YEL	0.120 Ohms ±20%
HIPOT	PRIMARY - SECONDARY	4000V, 60Hz, 1 SEC
	PRIMARY - PRIMARY	600V, 60Hz, 1 SEC
	SECONDARY - SECONDARY	600V, 60Hz, 1 SEC

PROPERTY AND COPYRIGHT NOTICE

THIS DRAWING AND THE INFORMATION IT CONVEYS ARE THE PROPERTY OF HAMMOND MANUFACTURING. IT MAY NOT BE REPRODUCED, TRANSMITTED OR USED IN ANY MANNER WHATSOEVER WITHOUT THE WRITTEN PERMISSION OF HAMMOND MANUFACTURING.

REV	NOTES	BY	DATE
1	UPDATED THE HARDWARE, WAS 8-32 X 1.50" LONG.	GG	15/04/14

HAMMOND MANUFACTURING
ELECTRONIC DIVISION
52 RANKIN PLACE,
WATERLOO, ONTARIO, N2J 3Z5
PHONE: 519.886.6181 FAX: 519.886.9540

TOROID POWER TRANSFORMER

DRAWN	DATE	NUMBER
G. GRAY	21/03/2014	1182L6
APPROVED	DATE	