Chipsmall Limited consists of a professional team with an average of over 10 year of expertise in the distribution of electronic components. Based in Hongkong, we have already established firm and mutual-benefit business relationships with customers from,Europe,America and south Asia,supplying obsolete and hard-to-find components to meet their specific needs.

With the principle of “Quality Parts,Customers Priority,Honest Operation,and Considerate Service”,our business mainly focus on the distribution of electronic components. Line cards we deal with include Microchip,ALPS,ROHM,Xilinx,Pulse,ON,Everlight and Freescale. Main products comprise IC,Modules,Potentiometer,IC Socket,Relay,Connector.Our parts cover such applications as commercial,industrial, and automotives areas.

We are looking forward to setting up business relationship with you and hope to provide you with the best service and solution. Let us make a better world for our industry!

Contact us

Tel: +86-755-8981 8866 Fax: +86-755-8427 6832
Email & Skype: info@chipsmall.com Web: www.chipsmall.com
Address: A1208, Overseas Decoration Building, #122 Zhenhua RD., Futian, Shenzhen, China

PART NUMBER	ENGINEERING NO.	LENGTH
1200790109	W05000A09M020	6' 6" +3.5" - 0 [2M +90MM - 0]
1200790096	W05000A09M040	13' 1" +6" - 0 [4M +150MM - 0]
1200790095	W05000A09M050	16' 4" +6" - 0 [5M +150MM - 0]
1200790094	W05000A09M060	19' 7" +6"- 0 [6M +150MM - 0]
1200790093	W05000A09M100	32' 4" +12 - 0 [10M +300MM - 0]

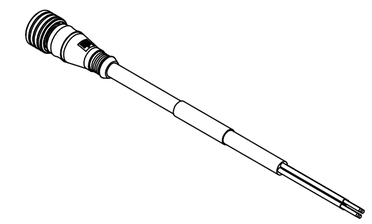

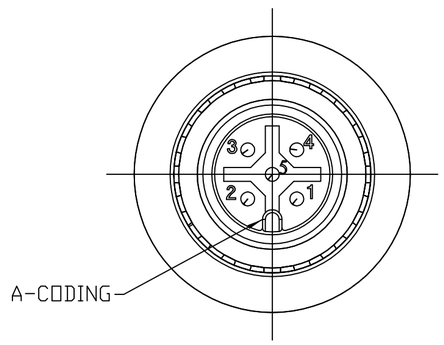

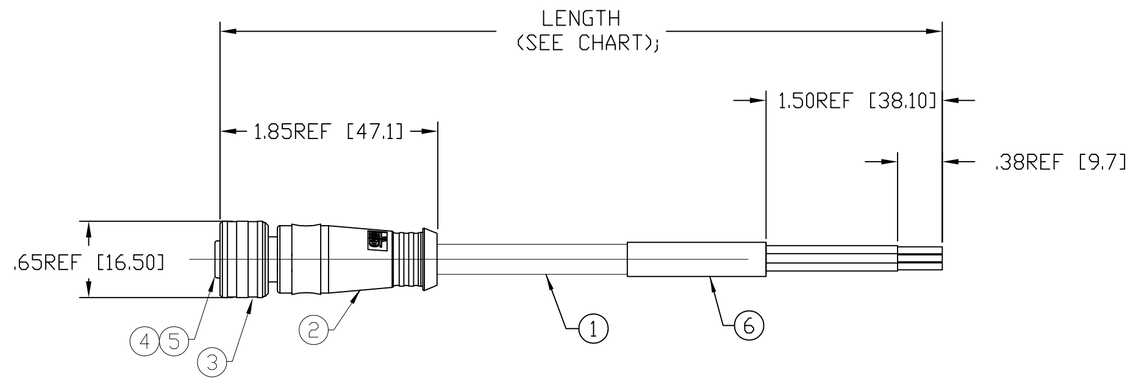

P1	
1	BROWN
2	WHITE
3	BLUE
4	BLACK
5	GRAY

WIRING DIAGRAM

NOTES:

1) MATERIAL: SEE TABLE

2) FINISHES: SEE TABLE

3) WRAP LABEL IS MARKED WITH P/N, DATE CODE, VOLTAGE & AMPERAGE.

4) MATES WITH: MICRO CHANGE, 5 POLE RECEPTACLE

5) ELECTRICAL DATA:
INLINE CORDSET
FEMALE A-CODING WITH FLYING LEADS
22AWG UNSHIELDED
POLES: 5
MAX. VOLTAGE: 250V
MAX. CURRENT 4A
CONTACT RESISTANCE: <5M Ohm
PROTECTION IP67/68/69K
TEMPERATURE RANGE: -25°C TO 90°C

6) PACKAGING:
CABLE ASSEMBLIES ARE BAGGED SEPERATELY
IN POLY BAGS WITH BAR CODE LABEL ATTACHED
TO OUTSIDE OF BAG.

7)ASSEMBLY IS RoHS COMPLIANT.

8)CERTIFICATION
cCSAus

ITEM	QTY.	DESCRIPTION	MATERIAL	FINISH
6	1	LABEL	PLASTIC FILM	BLACK/YELLOW
5	5	SOCKET CONTACT	COPPER ALLOY	GOLD PLATED
4	1	INSERT	PUR	BLACK
3	1	COUPLING NUT	BRASS	NICKEL PLATED
2	1	OVERMOLD	PUR	YELLOW
1	1	CABLE, 22AWG-5	PVC JACKET	YELLOW

RELEASE
EC NO: WEU2010-0003 7/2/09
DRWN: TWOLDEGE ---
CH'KD: BWOODMAN
APPR: JFMURPHY 2009/07/20
DESCRIPTION
REV A

QUALITY SYMBOL
▼=0
C=0

GENERAL TOLERANCES (UNLESS SPECIFIED)

	mm	INCH
4 PLACES	±----	±---
3 PLACES	±.005	±.005
2 PLACES	±.013	±.010
1 PLACE	±.025	±.020
ANGULAR ±---°		

DRAFT WHERE APPLICABLE MUST REMAIN WITHIN DIMENSIONS

DIMENSION STYLE: IN/MM
SCALE: 1:1
DESIGN UNITS: INCH
THIRD ANGLE PROJECTION

DRAWN BY: TWOLDEGE DATE: 2009/07/02
CHECKED BY: BWOODMAN DATE: 2009/07/02
APPROVED BY: ---- DATE: ----

TITLE: MICRO CHANGE ULTRA LOCK 5-P FEMALE STRAIGHT 22/5AWG PVC

molex MOLEX INCORPORATED

MATERIAL NO.: SEE CHANRT
DOCUMENT NO.: SD-120079-007
SHEET NO.: 1 0F 1
SIZE: C

THIS DRAWING CONTAINS INFORMATION THAT IS PROPRIETARY TO MOLEX INCORPORATED AND SHOULD NOT BE USED WITHOUT WRITTEN PERMISSION