Chipsmall Limited consists of a professional team with an average of over 10 year of expertise in the distribution of electronic components. Based in Hongkong, we have already established firm and mutual-benefit business relationships with customers from,Europe,America and south Asia,supplying obsolete and hard-to-find components to meet their specific needs.

With the principle of “Quality Parts,Customers Priority,Honest Operation,and Considerate Service”,our business mainly focus on the distribution of electronic components. Line cards we deal with include Microchip,ALPS,ROHM,Xilinx,Pulse,ON,Everlight and Freescale. Main products comprise IC,Modules,Potentiometer,IC Socket,Relay,Connector.Our parts cover such applications as commercial,industrial, and automotives areas.

We are looking forward to setting up business relationship with you and hope to provide you with the best service and solution. Let us make a better world for our industry!

Contact us

Tel: +86-755-8981 8866 Fax: +86-755-8427 6832
Email & Skype: info@chipsmall.com Web: www.chipsmall.com
Address: A1208, Overseas Decoration Building, #122 Zhenhua RD., Futian, Shenzhen, China

MATERIAL NUMBER	OLD PART NUMBER	FINISHED LENGTH
1200798023	W08000H08M020	2M +89mm -0 [6.6FT +3.5IN -0]

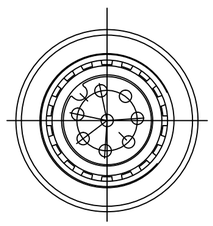

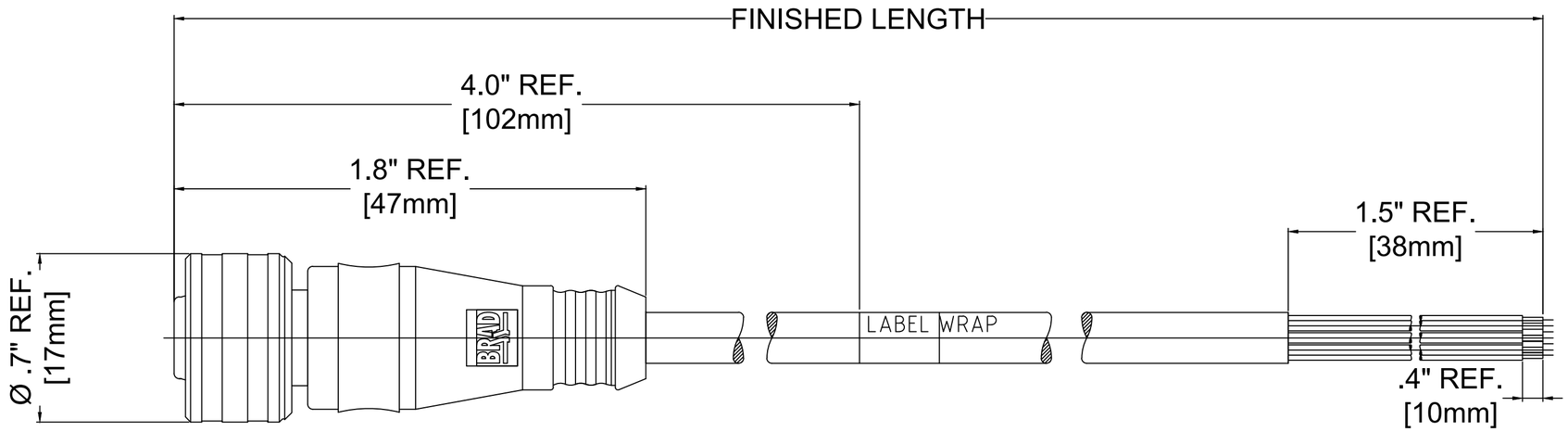

FEMALE FACE VIEW
8-POLE

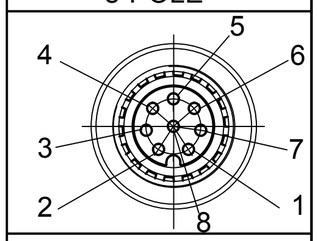

WIRING DIAGRAM

1 WHITE
2 BROWN
3 GREEN
4 YELLOW
5 GREY
6 PINK
7 BLUE
8 RED

W08000H08M020

CABLE TYPE
8 x .25mm²
BLACK PUR

CABLE LENGTH
M020 --2 meters
M100 --10 meters

SPECIFICATION DATA

COMPONENT	MATERIAL	FINISH
LABEL	MYLAR	BLACK/YELLOW
COUPLER	BRASS	NICKEL PLATED
CONTACT	COPPER ALLOY	Au OVER Ni
O-RING	VITON	GREEN
INSERT	NYLON	BLACK
OVERMOLD	TPE	BLACK
CABLE #24/8	PUR	BLACK
VOLTAGE RATING:		30V
AMPERAGE RATING:		2A
PROTECTION CLASS:		IP67/68/69K
OPERATING TEMPERATURE:		-20°C / 80°C

RELEASE
EC NO: IPG2014-0567
DRWN: GGUSTAFS 2013/09/05
CH'KD: TWOLDEGE ----
APPR: BWOODMAN 2013/11/12
DESCRIPTION
A
REV

QUALITY SYMBOL
▼=0
(C)=0

GENERAL TOLERANCES (UNLESS SPECIFIED)

	mm	INCH
4 PLACES	±---	±---
3 PLACES	±---	±.005
2 PLACES	±0.13	±.01
1 PLACE	±0.25	±.020
ANGULAR ±.5°		

DRAFT WHERE APPLICABLE MUST REMAIN WITHIN DIMENSIONS

DIMENSION STYLE: IN/MM
SCALE: NTS
DESIGN UNITS: INCH
THIRD ANGLE PROJECTION

DRAWN BY: LSTEMMLE DATE: 2010/02/10
CHECKED BY: TWOLDEGE DATE: 2013/09/12
APPROVED BY: BWOODMAN DATE: 2013/11/12

TITLE: MICRO-CHANGE ULTRA LOCK 8-POLE FEMALE STRAIGHT 8 X .25MM2 BLACK PUR

molex MOLEX INCORPORATED

MATERIAL NO.: SEE CHART
DOCUMENT NO.: SD-120079-066
SHEET NO.: 1 0F 1
SIZE: C

THIS DRAWING CONTAINS INFORMATION THAT IS PROPRIETARY TO MOLEX INCORPORATED AND SHOULD NOT BE USED WITHOUT WRITTEN PERMISSION