Chipsmall Limited consists of a professional team with an average of over 10 year of expertise in the distribution of electronic components. Based in Hongkong, we have already established firm and mutual-benefit business relationships with customers from,Europe,America and south Asia,supplying obsolete and hard-to-find components to meet their specific needs.

With the principle of “Quality Parts,Customers Priority,Honest Operation,and Considerate Service”,our business mainly focus on the distribution of electronic components. Line cards we deal with include Microchip,ALPS,ROHM,Xilinx,Pulse,ON,Everlight and Freescale. Main products comprise IC,Modules,Potentiometer,IC Socket,Relay,Connector.Our parts cover such applications as commercial,industrial, and automotives areas.

We are looking forward to setting up business relationship with you and hope to provide you with the best service and solution. Let us make a better world for our industry!

Contact us

Tel: +86-755-8981 8866 Fax: +86-755-8427 6832
Email & Skype: info@chipsmall.com Web: www.chipsmall.com
Address: A1208, Overseas Decoration Building, #122 Zhenhua RD., Futian, Shenzhen, China

MATERIAL NUMBER	OLD PART NUMBER	FINISHED LENGTH
120090-0016	4R3P00A27C300	11.81" +.75" -0 [.3M +19.1 -0]
120090-0018	4R3P00A27M010	3.28' +2.19" -0 [1.0M +55.6 -0]
120090-0029	4R4P00A27C300	11.81" +.75" -0 [.3M +19.1 -0]
120090-0031	4R4P00A27M010	3.28' +2.19" -0 [1.0M +55.6 -0]
120090-0037	4R5P00A27C300	11.81" +.75" -0 [.3M +19.1 -0]

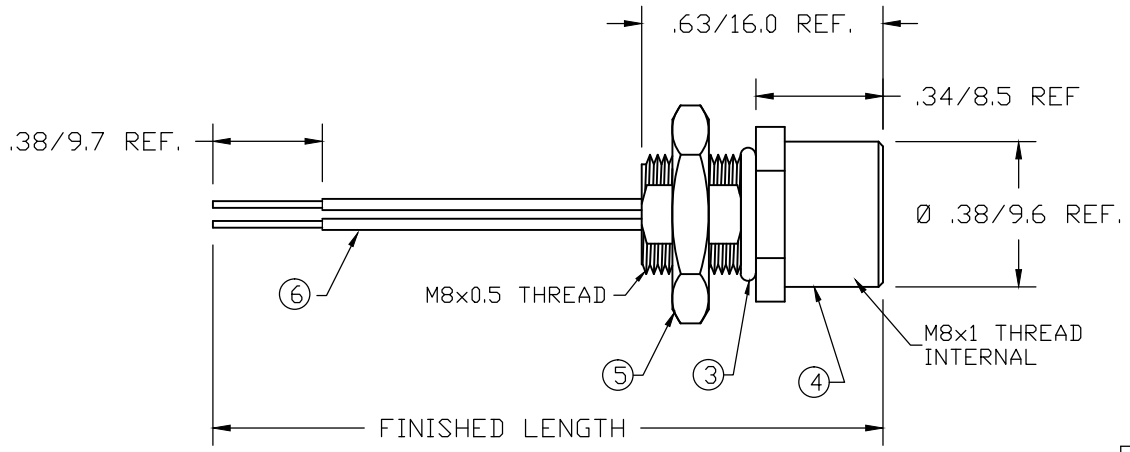

3 POLE FEMALE FACE VIEW

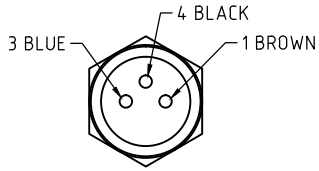

4 POLE FEMALE FACE VIEW

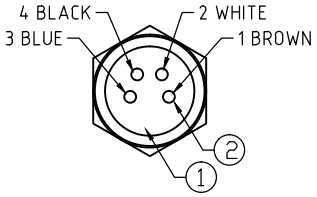

5 POLE FEMALE FACE VIEW

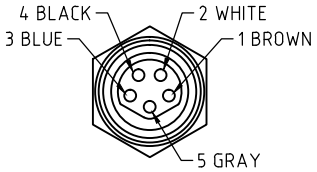

VOLTAGE RATING FOR 3 AND 4 POLE	60 VAC/ 75 VDC
VOLTAGE RATING FOR 5 POLE	30 VAC/VDC
AMPERAGE RATING FOR 3 AND 4 POLE	3 AMPS
AMPERAGE RATING FOR 5 POLE	3 AMPS
PROTECTION	IP67
OPERATING TEMPERATURE	-20°C TO 105°C
UL CERTIFICATIONS	UL LISTED, FILE NO. E152210
CSA CERTIFICATIONS	CSA CERTIFIED, FILE NO. LR6837

ITEM	COMPONENT	MATERIAL	FINISH
1	INSERT	POLYURETHANE	BLACK
2	CONTACT PIN	COPPER ALLOY	GOLD OVER NICKEL
3	O-RING	NITRILE	BLACK
4	RECEPTALCLE SHELL	BRASS	NICKEL PLATED
5	LOCKNUT	BRASS	NICKEL PLATED
6	CONDUCTOR- 24 AWG, (.22mm) COPPER STRANDING) 3 CONDUCTOR	PVC	SEE WIRING DIAGRAM

RLSD DRAWING
EC NO: WEU2012-0155 11/10/11
DRWN: VOU —
CHKD: KJOZWIK
APPR: JFMURPHY 2009/08/28
DESCRIPTION
REV B

QUALITY SYMBOLS
▼=0
Ⓒ=0

GENERAL TOLERANCES (UNLESS SPECIFIED)

	mm	INCH
4 PLACES	±--	±---
3 PLACES	±--	±.005
2 PLACES	±.15	±.01
1 PLACE	±0.3	±.020

ANGULAR ±1/2°

DRAFT WHERE APPLICABLE MUST REMAIN WITHIN DIMENSIONS

DIMENSION STYLE: IN/MM
SCALE: 2:1
DESIGN UNITS: METRIC
THIRD ANGLE PROJECTION

DRAWN BY: BW DATE: 2009/08/26
CHECKED BY: LH DATE: 2009/08/26
APPROVED BY: JFMURPHY DATE: 2009/08/28

TITLE
M8 FEMALE RECEPTACLE
3-5P M8X0.5 MOUNTING THD

MOLEX INCORPORATED

MATERIAL NO.: SEE CHART
DOCUMENT NO.: SD-120090-009
SHEET NO.: 1 OF 1
SIZE: A

THIS DRAWING CONTAINS INFORMATION THAT IS PROPRIETARY TO MOLEX INCORPORATED AND SHOULD NOT BE USED WITHOUT WRITTEN PERMISSION