Chipsmall Limited consists of a professional team with an average of over 10 year of expertise in the distribution of electronic components. Based in Hongkong, we have already established firm and mutual-benefit business relationships with customers from,Europe,America and south Asia,supplying obsolete and hard-to-find components to meet their specific needs.

With the principle of “Quality Parts,Customers Priority,Honest Operation,and Considerate Service”,our business mainly focus on the distribution of electronic components. Line cards we deal with include Microchip,ALPS,ROHM,Xilinx,Pulse,ON,Everlight and Freescale. Main products comprise IC,Modules,Potentiometer,IC Socket,Relay,Connector.Our parts cover such applications as commercial,industrial, and automotives areas.

We are looking forward to setting up business relationship with you and hope to provide you with the best service and solution. Let us make a better world for our industry!

Contact us

Tel: +86-755-8981 8866 Fax: +86-755-8427 6832
Email & Skype: info@chipsmall.com Web: www.chipsmall.com
Address: A1208, Overseas Decoration Building, #122 Zhenhua RD., Futian, Shenzhen, China

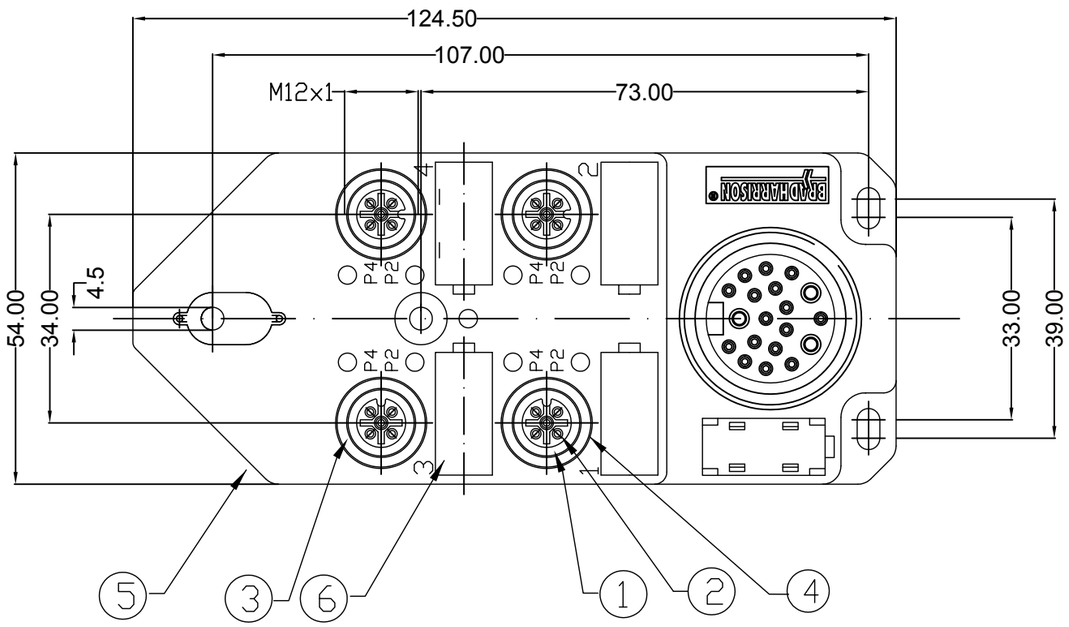

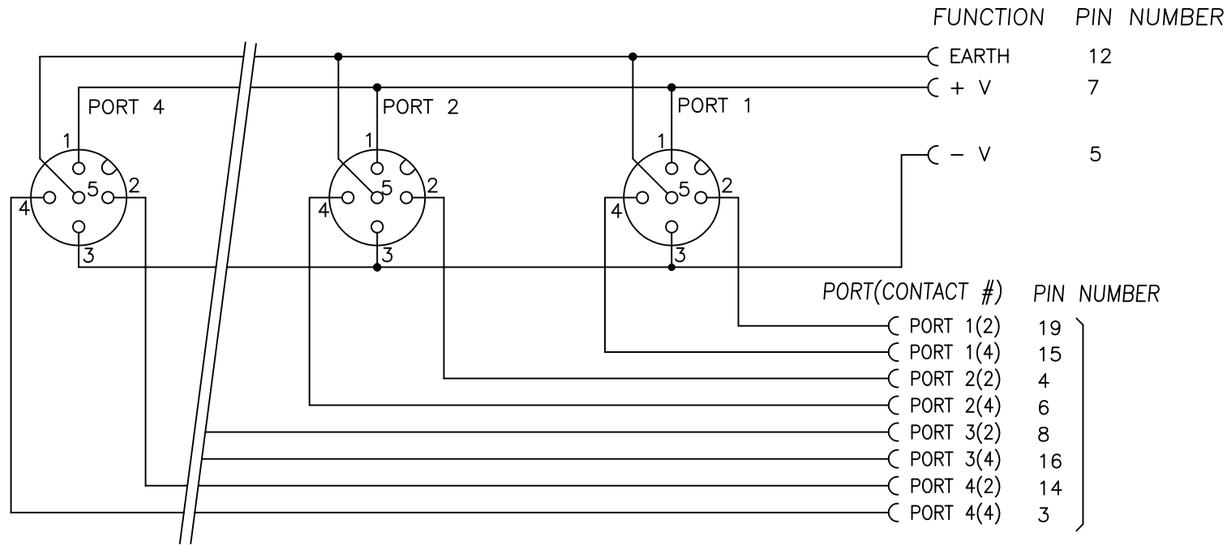

FACE VIEW OF
END RECEPTACLE

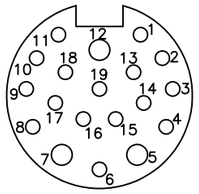

NOTE
PINS 1,2,9,10,11,13,17,18 NOT USED

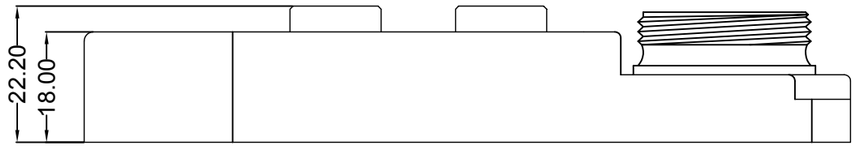

MATERIAL NUMBER	OLD PART NUMBER	FINISHED LENGTH	CABLE JACKET MATERIAL
1201140035	BTY4030-FBB	-	-

VOLTAGE RATING	10-30 VDC
AMPERAGE RATING PER PORT	4 AMPS
PROTECTION	IP67
OPERATING TEMPERATURE	-20°C TO 90°C
UL CERTIFICATIONS	UL RECOGNIZED, FILE NO. E46237
CSA CERTIFICATIONS	CSA CERTIFIED, FILE NO. LR6837

ITEM	COMPONENT	MATERIAL	FINISH
1	INSERT	NYLON	BLACK
2	CONTACT SOCKET	COPPER ALLOY	GOLD OVER NICKEL
3	O-RING	NITRILE	RED
4	RECEPTACLE SHELL	BRASS	NICKEL PLATED
5	HOUSING	PBT	YELLOW
6	LABEL	ABS	WHITE

DESCRIPTION
EC NO: WEU2010-0423
DRWN: LSTEMMLE 2010/03/10
CH'KD: NSTAUDIG ----
APPR: NSTAUDIG 2010/03/16
DESCRIPTION
REV 1

QUALITY SYMBOLS
▼ = 0
(C) = 0

GENERAL TOLERANCES (UNLESS SPECIFIED)

	mm	INCH
4 PLACES	±---	±---
3 PLACES	±---	±---
2 PLACES	±---	±.01
1 PLACE	±0.3	±---
ANGULAR ± --- °		

DRAFT WHERE APPLICABLE MUST REMAIN WITHIN DIMENSIONS

DIMENSION STYLE: MM ONLY
SCALE: 2:1
DESIGN UNITS: METRIC
THIRD ANGLE PROJECTION

DRAWN BY: LSTEMMLE DATE: 2010/03/10
CHECKED BY: FP DATE: 2010/03/10
APPROVED BY: NSTAUDIG DATE: 2010/03/15

MICRO-CHANGE MPIS
4 PORT TOP MOUNT
MINI-CHANGE

molex MOLEX INCORPORATED

MATERIAL NO.: SEE TABLE
DOCUMENT NO.: SD-120114-023
SHEET NO.: 1 OF 1
SIZE: A3

THIS DRAWING CONTAINS INFORMATION THAT IS PROPRIETARY TO MOLEX INCORPORATED AND SHOULD NOT BE USED WITHOUT WRITTEN PERMISSION