Chipsmall Limited consists of a professional team with an average of over 10 year of expertise in the distribution of electronic components. Based in Hongkong, we have already established firm and mutual-benefit business relationships with customers from,Europe,America and south Asia,supplying obsolete and hard-to-find components to meet their specific needs.

With the principle of “Quality Parts,Customers Priority,Honest Operation,and Considerate Service”,our business mainly focus on the distribution of electronic components. Line cards we deal with include Microchip,ALPS,ROHM,Xilinx,Pulse,ON,Everlight and Freescale. Main products comprise IC,Modules,Potentiometer,IC Socket,Relay,Connector.Our parts cover such applications as commercial,industrial, and automotives areas.

We are looking forward to setting up business relationship with you and hope to provide you with the best service and solution. Let us make a better world for our industry!

Contact us

Tel: +86-755-8981 8866 Fax: +86-755-8427 6832
Email & Skype: info@chipsmall.com Web: www.chipsmall.com
Address: A1208, Overseas Decoration Building, #122 Zhenhua RD., Futian, Shenzhen, China

THIS DRAWING IS UNPUBLISHED. RELEASED FOR PUBLICATION -,- .
© COPYRIGHT - BY TYCO ELECTRONICS CORPORATION. ALL INTERNATIONAL RIGHTS RESERVED.

LOC	DIST
AD	00

REVISIONS

P	LTR	DESCRIPTION	DATE	DWN	APVD
	C	REVISED PER ECO-11-000045	04JAN11	DH	DY

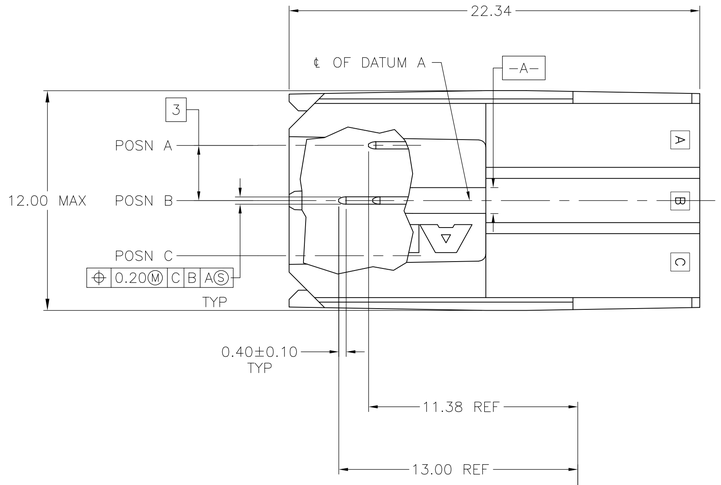

1. MATERIAL: HOUSING: POLYESTER. COLOR: GRAY. UL 94V-O.
   CONTACT: PHOSPHOR BRONZE.
2. FINISH: CONTACT MATING AREA: 1.27μm MIN GOLD OR 0.08μm MIN GOLD OVER 0.76μm PALLADIUM-NICKEL.
   ACTION PIN AREA: 0.5um MIN TIN PLATE,
   ALL OVER 1.27um MIN NICKEL UNDERPLATE.
3. FINISH: CONTACT LUBRICATION WITH BELLCORE APPROVED LUBRICANT. TECHNICAL REFERENCE: TR-NWT-001217, ISSUE 1, NOVEMBER 1992.
4. REFERENCE APPLICATION SPEC 114-1103 FOR RECOMMENDED PLATED THRU HOLE DIAMETER AND PLATING THICKNESS.
5. CURRENT RATING 10A/CONTACT PER PRODUCT SPEC 108-1651.

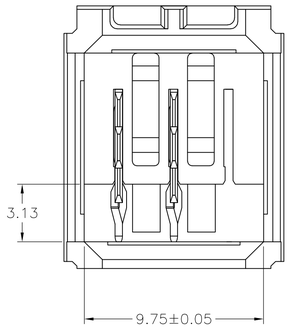

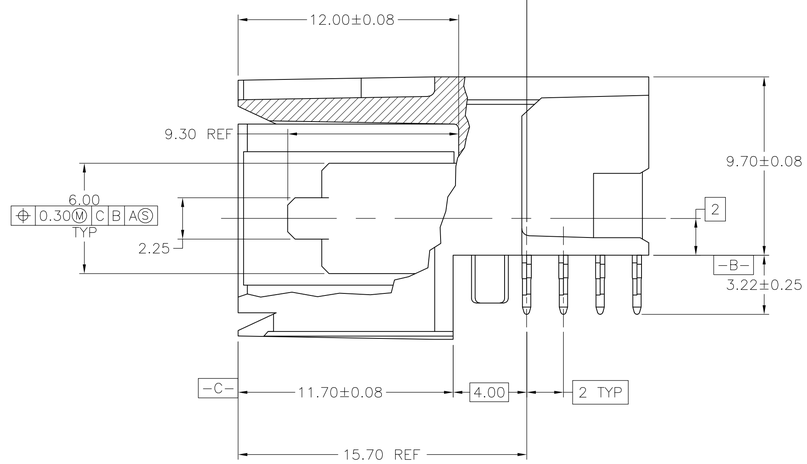

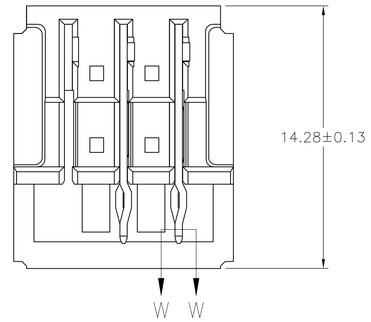

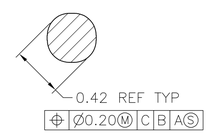

SECTION W-W
SCALE 40:1

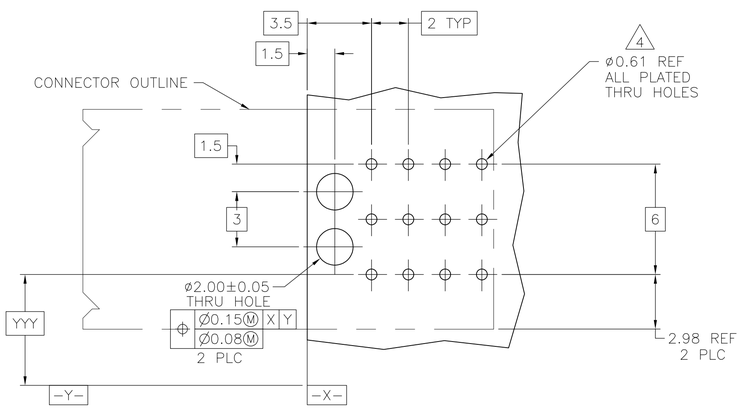

RECOMMENDED PCB HOLE LAYOUT

B	A	2	120974-1
POSITIONS LOADED WITH 9.30 REF CONTACTS	POSITIONS LOADED WITH 7.68 REF CONTACTS	NO OF LOADED POSITIONS	PART NUMBER

THIS DRAWING IS A CONTROLLED DOCUMENT.

DIMENSIONS: mm

TOLERANCES, UNLESS OTHERWISE SPECIFIED:
0 PLC ± -
1 PLC ± -
2 PLC ± 0.13
3 PLC ± -
4 PLC ± -
ANGLES ± -

MATERIAL 1
FINISH 2 3

DWN B.CARBO 14DEC04
CHK R.PATTERSON 14DEC04
APVD R.PATTERSON 14DEC04
PRODUCT SPEC -
APPLICATION SPEC -
WEIGHT -

Tyco Electronics
Tyco Electronics Corporation
Harrisburg, PA 17105-3608

NAME
ASSEMBLY, RIGHT ANGLE HEADER,
W/ RETENTION PEGS,
UNIVERSAL POWER MODULE

SIZE	CAGE CODE	DRAWING NO	RESTRICTED TO
A1	00779	C-120974	-

CUSTOMER DRAWING
SCALE 6:1 SHEET 1 OF 1 REV C

4805 (1/08)