Chipsmall Limited consists of a professional team with an average of over 10 year of expertise in the distribution of electronic components. Based in Hongkong, we have already established firm and mutual-benefit business relationships with customers from,Europe,America and south Asia,supplying obsolete and hard-to-find components to meet their specific needs.

With the principle of “Quality Parts,Customers Priority,Honest Operation,and Considerate Service”,our business mainly focus on the distribution of electronic components. Line cards we deal with include Microchip,ALPS,ROHM,Xilinx,Pulse,ON,Everlight and Freescale. Main products comprise IC,Modules,Potentiometer,IC Socket,Relay,Connector.Our parts cover such applications as commercial,industrial, and automotives areas.

We are looking forward to setting up business relationship with you and hope to provide you with the best service and solution. Let us make a better world for our industry!

Contact us

Tel: +86-755-8981 8866 Fax: +86-755-8427 6832
Email & Skype: info@chipsmall.com Web: www.chipsmall.com
Address: A1208, Overseas Decoration Building, #122 Zhenhua RD., Futian, Shenzhen, China

used for: DIN EN 60603

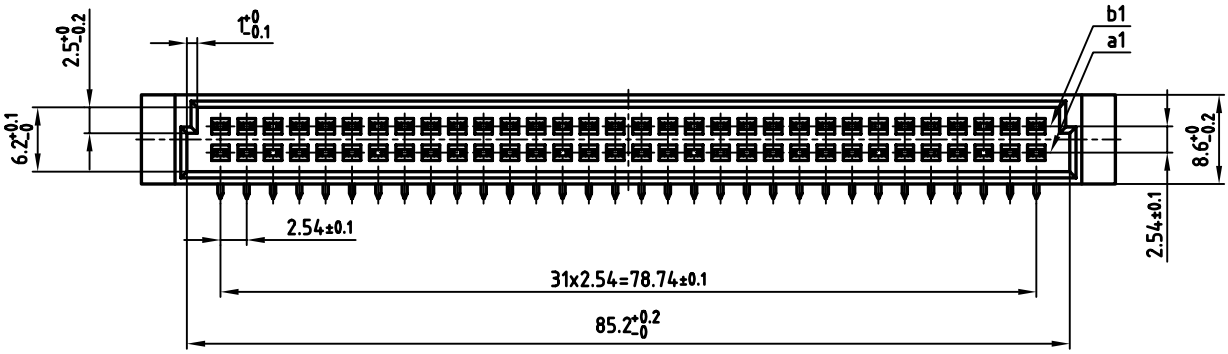

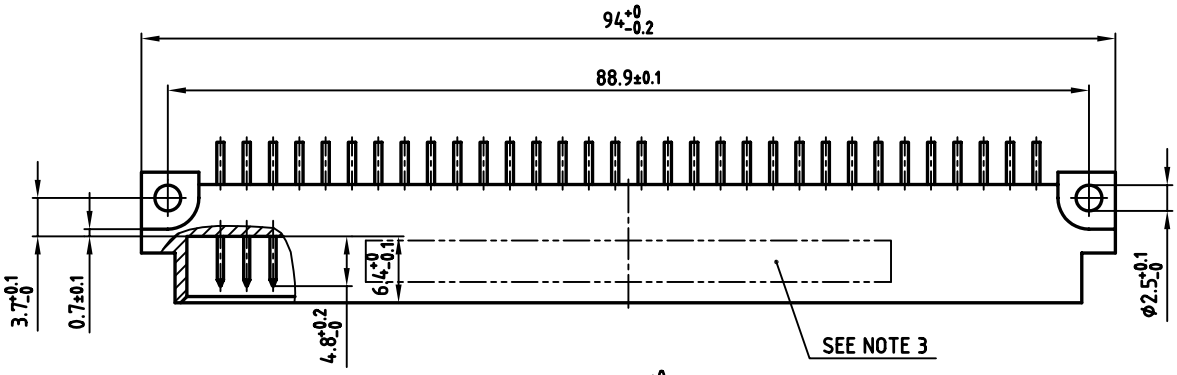

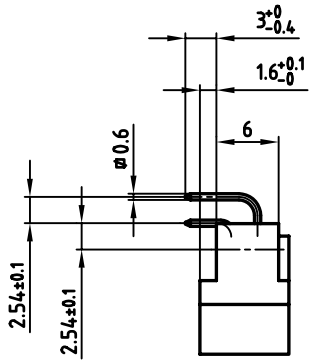

Directive 2002/95/EC „RoHS" Compliant

NOTES:

1. INSULATOR: PBTP UL 94 V-0; GREY
2. CONTACTS: COPPER ALLOY
   PLATING: GOLD OVER NICKEL
   50 MATING CYCLES
3. CONNECTOR IS PART MARKED: 121A10039X CONEC ABC

P.C.B. HOLE DRILLINGS

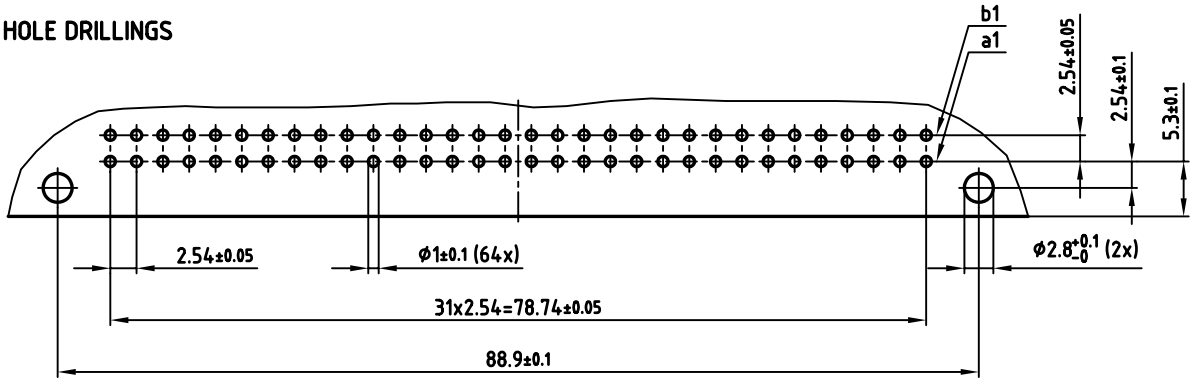

APPROVAL # FREIGABE # DEBLOCAGE # AUTOR/ZACION # APPROVAL

CUSTOMER APPROVAL DATE:

NAME: TITLE:

COMPANY NAME:

THIS DRAWING MAY NOT BE COPIED OR REPRODUCED IN ANY WAY, AND MAY NOT BE PASSED ON TO A THIRD PARTY WITHOUT WRITTEN PERMISSION. OWNERSHIP AND COPYRIGHT OF CONEC GmbH

DO NOT ALTER CAD DRAWING BY HAND

rev.	description	date	name

tolerance

dim. in mm

	date	name
2005		
drawn	21.06.	Lehmenkühler
appd.	21.06.	Mickenbecker
norm	DIN EN 60603	
d-old		

CONEC®

scale: 2:1

material: SEE NOTES

title:

MALE CONNECTOR TYPE "B"

64pos. ANGLED

dwg no: 12K2A234

AutoCAD 2004 | DIN-A 3 | sh: 1/1

part no: 121A10039X