Chipsmall Limited consists of a professional team with an average of over 10 year of expertise in the distribution of electronic components. Based in Hongkong, we have already established firm and mutual-benefit business relationships with customers from,Europe,America and south Asia,supplying obsolete and hard-to-find components to meet their specific needs.

With the principle of “Quality Parts,Customers Priority,Honest Operation,and Considerate Service”,our business mainly focus on the distribution of electronic components. Line cards we deal with include Microchip,ALPS,ROHM,Xilinx,Pulse,ON,Everlight and Freescale. Main products comprise IC,Modules,Potentiometer,IC Socket,Relay,Connector.Our parts cover such applications as commercial,industrial, and automotives areas.

We are looking forward to setting up business relationship with you and hope to provide you with the best service and solution. Let us make a better world for our industry!

Contact us

Tel: +86-755-8981 8866 Fax: +86-755-8427 6832
Email & Skype: info@chipsmall.com Web: www.chipsmall.com
Address: A1208, Overseas Decoration Building, #122 Zhenhua RD., Futian, Shenzhen, China

THIS DRAWING IS UNPUBLISHED.
VERTRAULICHE UNVEROEFFENTLICHTE ZEICHNUNG
© COPYRIGHT 2005 - ALL RIGHTS RESERVED.
ALLE RECHTE VORBEHALTEN.

RELEASED FOR PUBLICATION - 2005
FREI FUER VEROEFFENTLICHUNG

MATED WITH
PASSEND ZU

LOC	DIST
A1	-

PROJEKT NR.:

REVISIONS
ABENDERUNGEN

P	LTR	DESCRIPTION BESCHREIBUNG	DATE	DWN	APVD
	C12	ECR-15-001434	02FEB2015	SG	RL
	C13	ECR-15-010777	20JUL2015	SG	RL
	C14	ECR-15-012070	22SEP2015	JB.JH	BK
	C15	ECR-15-017391	30NOV2015	SG	RL

CONTACTS FOR FLR-CABLE
Kontakte fuer FLR-Leitung

USABLE WITH TAB 0.8mm AND TAB 0.6mm THICKNESS
Verwendbar mit Flachstecker 0.8mm und 0.6mm Dicke

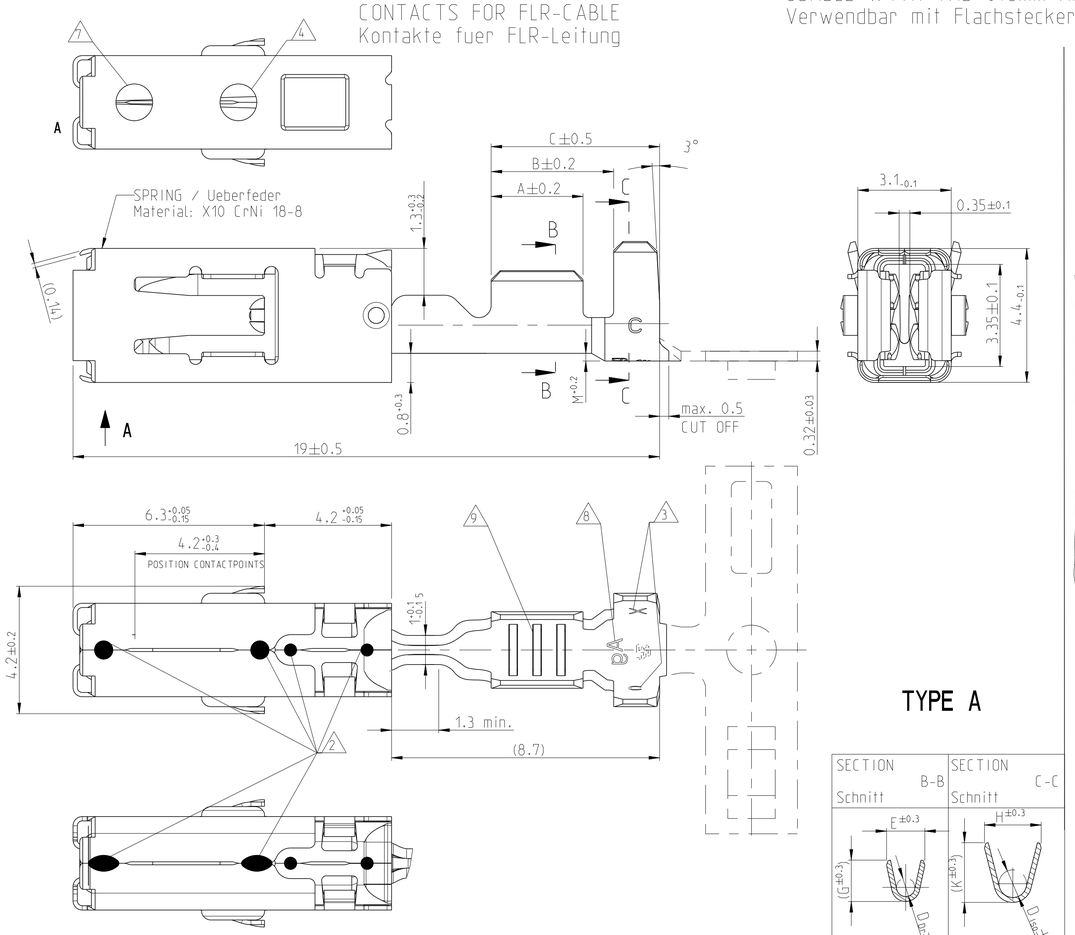

TYPE A

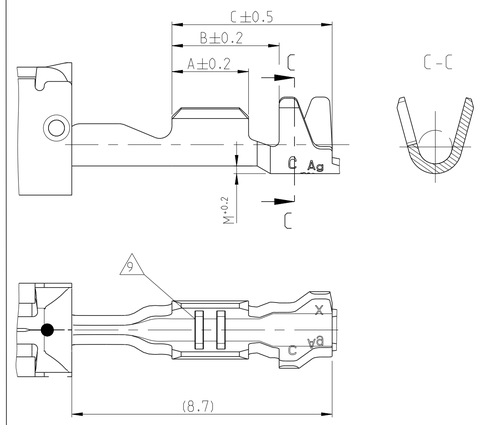

TYPE B

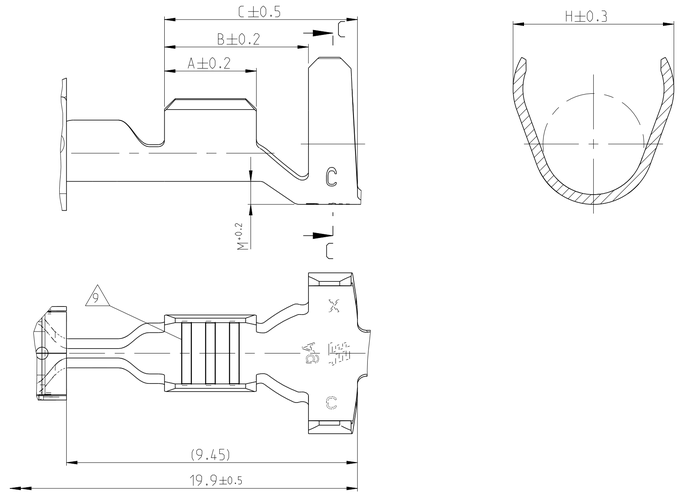

CONTACTS FOR SINGLE WIRE SEALING SYSTEM: FLR- AND FLK- CABLE
Kontakte fuer Einzel-Dichtung-System: FLR- und FLK-Leitung

DIMENSIONS SEE FIGURE "CONTACS FOR FLR-CABLE"
Masse siehe Darstellung der Kontakte fuer FLR-Leitung

SECTION B-B Schnitt

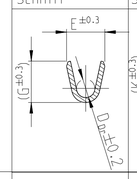

SECTION C-C Schnitt

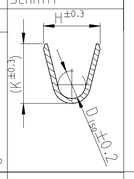

SINGLE WIRE SEALING SYSTEM 6

SINGLE WIRE SEAL Einzeldichtung 6		
963292-1	2.7...3.0	YELLOW gelb
963293-1	2.0...2.7	REDBROWN rotbraun
963294-1	1.2...2.1	BLUE blau
ORDER NO. Bestell-Nr.	INSULATION DIA Isolations Ø	COLOUR Farbe

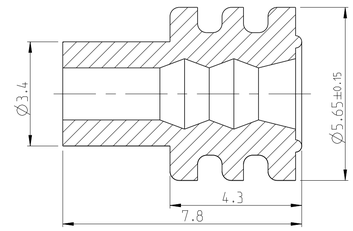

ORDER NO. Bestell-Nr. Strip Bandware	REV.	WIRE RANGE Drahtgroessenbereich (mm²)	INSULATION DIA Isolations Ø (mm)	MATERIAL Werkstoff	PLATING Ueberzug	LENGTH Laenge	WIRE CRIMP Drahtcrimp	INSUL. CRIMP Isol.-Crimp	Form der ISO-Crimp Form des Iso-Crimp	ORDER NO. Bestell-Nr. TOOL / INSERT Handzange / Matrize FOR LOOSE PIECE f. Einzelausfuehrung	ORDER NO. Bestell-Nr. EXTRACTION TOOL Ausdrueckwerkzeug	CRIMP DATA AND CRIMP TOOL Crimpdaten u. Crimpwerkzeuge
						CRIMP DIMENSIONS (mm) Crimpabmessungen						
0-1241396-4	C	>1.0-2.5	2.2-3.0	CuNiSi	SILVERPLATED versilbert 13	A = 3.5 B = 5.2 C = 6.8	E = 3.6 G = 3.8 D_{Dr} = 1.8	H = 5.45 K = (4.8) D_{iso} = 3.5 M = 0.85	SINGLE WIRE SEALING SYSTEM Einzeldichtungssystem 6	HANDCRIMPTOOL Handcrimpwerkzeug 539635-1 INSERT / Matrize 539952-2	539969-1	SEE APPLICATION SPECIFICATION siehe Verarbeitungsspezifikation 114-18387
12 ~~2-1241396-3~~	C			CuNiSi	PRESILVER vorversilbert 8							
0-1241396-3	C			CuNiSi	PRESILVER vorversilbert 8							
0-1241396-2	C			CuNiSi	4 TINPLATED vorverzinnt							
0-1241396-1	C			CuNiSi								
0-1241394-3	C	0.5-1.0	1.4-2.7	CuNiSi	PRESILVER vorversilbert 8	A = 3.0 B = 4.7 C = 6.3	E = 2.5 G = 2.7 D_{Dr} = 1.2	H = 5.25 K = (4.8) D_{iso} = 3.3 M = 0.75				
0-1241394-2	C			CuNiSi	4 TINPLATED vorverzinnt							
0-1241394-1	C			CuNiSi								
0-1241392-3	C	0.2-0.35	1.1-1.4	CuNiSi	PRESILVER vorversilbert 8	A = 2.5 B = 4.7 C = 6.3	E = 1.9 G = 1.9 D_{Dr} = 0.75	H = 4.85 K = (4.4) D_{iso} = 3.2 M = 0.7				
0-1241392-2	C			CuNiSi	4 TINPLATED vorverzinnt							
0-1241392-1	C	10		CuNiSi								
0-1564984-3	C	0.2-0.35	1.1-1.4	CuNiSi	PRESILVER vorversilbert 8		E = 2.4 G = 2.3 D_{Dr} = 1.0			HANDCRIMPTOOL 539635-1 INSERT 4-1579016-1		
0-1564984-2	C			CuNiSi	4 TINPLATED vorverzinnt							
0-1564984-1	C			CuNiSi								
0-1241390-3	C	>1.0-2.5 5	2.2-3.0 5	CuNiSi	PRESILVER vorversilbert 8	A = 3.3 B = 4.3 C = 5.8	E = 3.6 G = 3.8 D_{Dr} = 1.8	H = 4.7 K = (4.9) D_{iso} = 2.6 M = 0.4	TYPE A	HANDCRIMPTOOL Handcrimpwerkzeug 539635-1 INSERT / Matrize 539951-2		
0-1241390-2	C			CuNiSi	4 TINPLATED vorverzinnt							
0-1241390-1	C			CuNiSi								
0-1241388-3	C	0.5-1.0 C15	1.4-2.1 C15	CuNiSi	PRESILVER vorversilbert 8	A = 3.0 B = 4.0 C = 5.5	E = 2.5 G = 2.7 D_{Dr} = 1.2	H = 3.7 K = (3.9) D_{iso} = 1.8 M = 0.2				
0-1241388-2	C			CuNiSi	4 TINPLATED vorverzinnt							
0-1241388-1	C			CuNiSi								
0-1241386-3	C	0.2-0.35	1.1-1.4	CuNiSi	PRESILVER vorversilbert 8	A = 2.5 B = 3.5 C = 5.2	E = 1.9 G = 1.9 D_{Dr} = 0.75	H = 2.5 K = (2.5) D_{iso} = 1.1 M = 0.2	TYPE B			
0-1241386-2	C			CuNiSi	4 TINPLATED vorverzinnt							
0-1241386-1	C	10		CuNiSi								
0-1564982-3	C	0.2-0.35	1.1-1.4	CuNiSi	PRESILVER vorversilbert 8		E = 2.4 G = 2.3 D_{Dr} = 1.0			HANDCRIMPTOOL 539635-1 INSERT 4-1579016-1		
0-1564982-2	C			CuNiSi	4 TINPLATED vorverzinnt							
0-1564982-1	C			CuNiSi								

1 TO BE USED ON Flachstecker / TAB 2.8 $^{+0.3}_{-0.1}$ x 0.6 $^{+0.07}_{-0.03}$
Geeignet fuer Flachstecker / TAB 2.8 $^{+0.3}_{-0.1}$ x 0.8 ±0.03

2 ALTERNATIVELY LASERWELDED POINT OR LINE SHAPED (DIE CAUSED)
Laserschweissung wahlweise Punk- oder Linienfoermig (Fertigungsbedingt)

3 DIE-IDENTIFICATION AND REVISION STATUS
Kennung fuer Werkzeug und Revisionsstand

4 MIN. 0.8µm GOLDPLATE IN CONTACT AREA OVER MIN. 1.3µm NICKELPLATE;
MIN. 1µm TINPLATE IN CRIMP AREA.
AS INDEX SEE HOLE AT SPRING
0.8µm Goldueberzug im Kontaktbereich ueber min. 1.3µm Nickelueberzug;
min. 1µm Zinnueberzug im Crimpbereich.
Zur Kennzeichnung siehe Loch an der Ueberfeder

5 FOR DOUBLE AND SINGLE CRIMP
Fuer Doppel- und Einzelcrimp

6 SINGLE WIRE SEAL TO BE SELECTED ACCORDING TO INSULATION-DIA
Auswahl der Einzeldichtung entsprechend dem Isolationsdurchmesser

7 MANUFACTORIN-CONDITIONED HOLE, IS STARTING FROM REV. C AT ALL VERSIONS
Fertigungsbedingtes Loch, befindet sich ab Rev. C an allen Kontakten

8 MARKING WITH "Ag" FOR SILVERPLATE IN CONTACT AREA
Kennzeichnung mit "Ag" bei Silberueberzug im Kontaktbereich

9 DIFFERENT FORM OF THE SERRATION POSSIBLE
Unterschiedliche Ausfuehrung der Rillen moeglich

10 PN 1241386 AND 1241392 NOT FOR NEW APPLICATION. REPLACED BY PN 1564982 AND PN1564984.
PN 1241386 und 1241392 nicht fuer Neuanwendung. Ersatz durch PN 1564982 und 1564984

11 DETAILS OF DESIGN ARE LEFT TO MANUFACTURER
Einzelheiten der Ausfuehrung bleiben dem Hersteller ueberlassen

12 FINISHED PRODUCT ~~AT CONTACT~~ POINTS LUBRICATED
~~Fertigteil~~ an den Kontaktpunkten geschmiert

13 "Ag+" MARKING ON SILVER PLATED VERSIONS FOR INCREASED LIMIT TEMPERATURE
"Ag+" Markierung auf versilberten Versionen fuer erhoehte Grenztemperatur

1:1

THIS DRAWING IS A CONTROLLED DOCUMENT.
DIESES ZEICHNUNGSDOKUMENT WIRD DURCH AMP INCORPORATED KONTROLLIERT.
ANDERUNGEN, DIE DEM TECHNISCHEN FORTSCHRITT DIENEN, SIND VORBEHALTEN.
DIN ZWECKE VERVIELFALTIGEN, VERAENDERN UND WEITERGEBEN, BEDARF DER AMP GENEHMIGUNG.

DIMENSIONS: MASSEINHEITEN: mm

TOLERANCES UNLESS OTHERWISE SPECIFIED: ALLGEMEINTOLERANZEN
0 PLC ±-
1 PLC ±GENERAL-
2 PLC ±TOLREANZ
3 PLC ±
4 PLC ±
ANGLES ±1°

MATERIAL: see table / siehe Tabelle
FINISH: see table / siehe Tabelle

DWN 06JUN2006 R. Liebing
CHK -
APVD -
PRODUCT SPEC PRODUKTSPEZ. 108-18717
APPLICATION SPEC VERARBEITUNGSSPEZ. 114-18387
WEIGHT GEWICHT -

TE Connectivity

NAME: PRODUCT GROUP DRAWING FOR AMP MCP 2.8K

SIZE	CAGE CODE	DRAWING NO ZEICHNUNGS-NR.	RESTRICTED TO NUR FUER
A1	00779	C-1241437	-

Customer Drawing /KUNDENZEICHNUNG
SCALE MASSSTAB 10:1 SHEET BLATT 1 OF VON 1 REV C15