Chipsmall Limited consists of a professional team with an average of over 10 year of expertise in the distribution of electronic components. Based in Hongkong, we have already established firm and mutual-benefit business relationships with customers from,Europe,America and south Asia,supplying obsolete and hard-to-find components to meet their specific needs.

With the principle of “Quality Parts,Customers Priority,Honest Operation,and Considerate Service”,our business mainly focus on the distribution of electronic components. Line cards we deal with include Microchip,ALPS,ROHM,Xilinx,Pulse,ON,Everlight and Freescale. Main products comprise IC,Modules,Potentiometer,IC Socket,Relay,Connector.Our parts cover such applications as commercial,industrial, and automotives areas.

We are looking forward to setting up business relationship with you and hope to provide you with the best service and solution. Let us make a better world for our industry!

Contact us

Tel: +86-755-8981 8866 Fax: +86-755-8427 6832
Email & Skype: info@chipsmall.com Web: www.chipsmall.com
Address: A1208, Overseas Decoration Building, #122 Zhenhua RD., Futian, Shenzhen, China

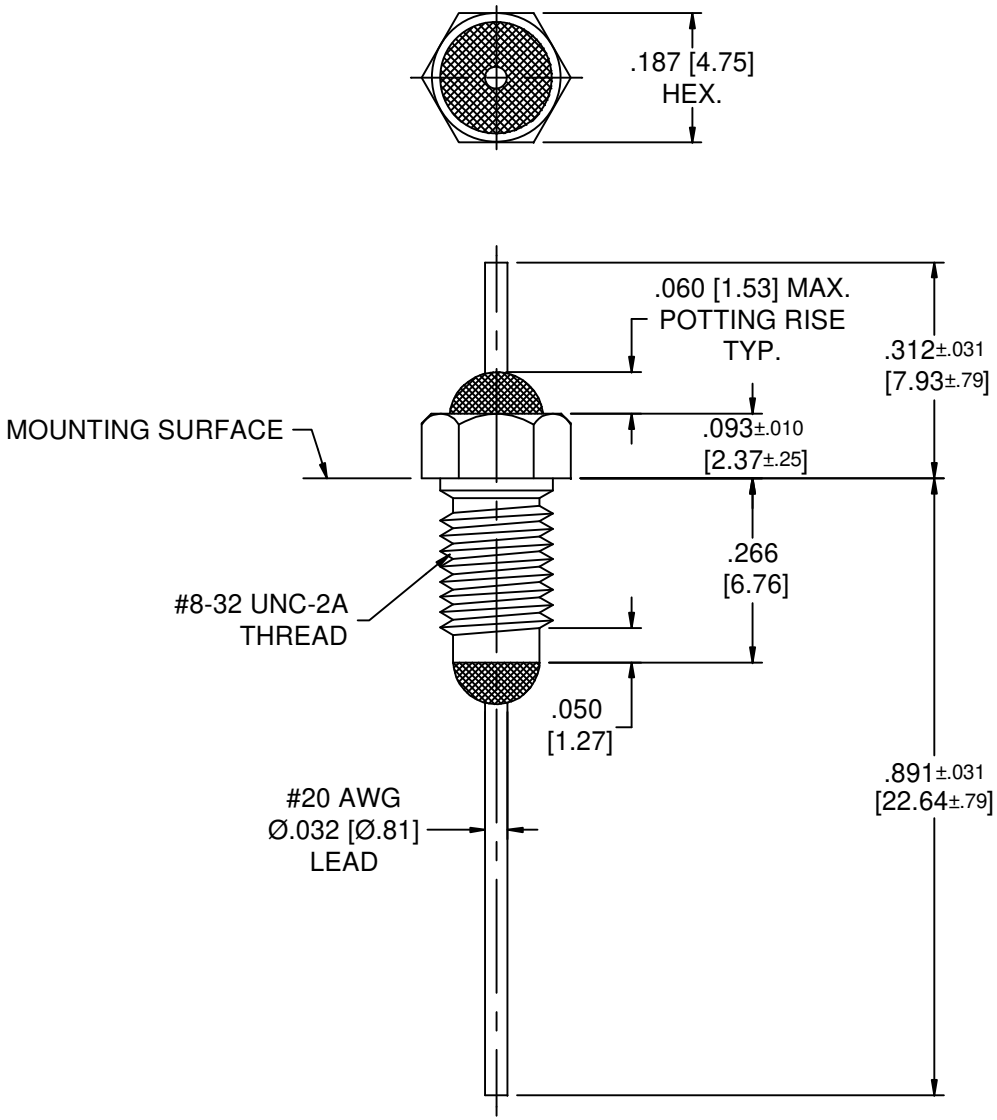

LEAD FINISH	SILVER
BUSHING FINISH	SILVER
05 CAPACITANCE	3000pF MIN.
TEMP. RANGE	-55°C TO +125°C
CURRENT	10 AMPS MAX.
WORKING VOLTAGE	125°C 200 VDC
DC RESISTANCE	.01 Ohms MAX.

I.L. PER MIL-STD-220 @ 25°C (NO LOAD)

FREQ.	I.L. (dB)
10 MHz	5
1 GHz	65
10 GHz	70
100 GHz	45

SCHEMATIC

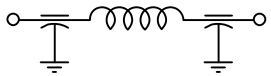

MARKING:

PART: FS003

BAG PACK : SCI 1250F-003
DATE CODE
LOT NO.
QTY / BAG (200 MAX.)

NOTES:
1. MAX INSTALLATION TORQUE: 4in-lbs.
2. HARDWARE IS INCLUDED.
3. THIS IS A LEAD FREE PART.
4. MAX REFLOW IS 245°C FOR 5 SEC.

RoHS compliant

REV. NO.	CHANGE NOTICE
05	CN 46959-ENG
04	CN 41978-ENG
03	CN 30491-CPD
02	CN 26708-CPD
01	CN 22179-CPD
00	CN 18174-CPD

UNLESS OTHERWISE SPECIFIED DIMENSIONS ARE IN INCHES [MILLIMETERS]

DO NOT SCALE

THIRD ANGLE PROJECTION

TOLERANCES UNLESS OTHERWISE SPECIFIED
Dec. .x ±
Dec. .xx ±
Dec. .xxx ± .010 [.25]
Angles ± 0° 30"

CODE IDENT. NO. 0LSP2

SPECTRUM CONTROL INC.

FAIRVIEW PENNSYLVANIA

Dwn. KNOWLTON
Date 5-21-08
Engr. B.Devine
Sheet 1 of 1

Description: FILTER, SING, Pi, BUSHING

1250F-003

Quality Products From The Specialists In Electro—Magnetic Compatibility