Chipsmall Limited consists of a professional team with an average of over 10 year of expertise in the distribution of electronic components. Based in Hongkong, we have already established firm and mutual-benefit business relationships with customers from,Europe,America and south Asia,supplying obsolete and hard-to-find components to meet their specific needs.

With the principle of “Quality Parts,Customers Priority,Honest Operation,and Considerate Service”,our business mainly focus on the distribution of electronic components. Line cards we deal with include Microchip,ALPS,ROHM,Xilinx,Pulse,ON,Everlight and Freescale. Main products comprise IC,Modules,Potentiometer,IC Socket,Relay,Connector.Our parts cover such applications as commercial,industrial, and automotives areas.

We are looking forward to setting up business relationship with you and hope to provide you with the best service and solution. Let us make a better world for our industry!

Contact us

Tel: +86-755-8981 8866 Fax: +86-755-8427 6832
Email & Skype: info@chipsmall.com Web: www.chipsmall.com
Address: A1208, Overseas Decoration Building, #122 Zhenhua RD., Futian, Shenzhen, China

PART NO. 12A

NOTES:

1. HARDWARE SHIPPED UNASSEMBLED. (D)

MATERIAL LIST :

BUSHING - BRASS , NICKEL PLATE
INSULATING SPACERS - PHENOLIC
SOLDER TERMINAL - BRASS , HOT - TINNED
TIP SPRING - NICKEL SILVER ALLOY
WASHER - C.R. STEEL
(D) HEX NUT - BRASS , NICKEL PLATE
(D) MOUNTING WASHER - STEEL , NICKEL PLATE
SHUNT SPRING - NICKEL SILVER ALLOY

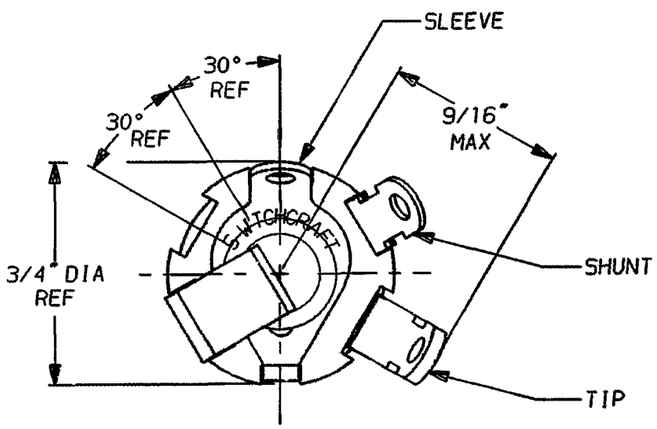

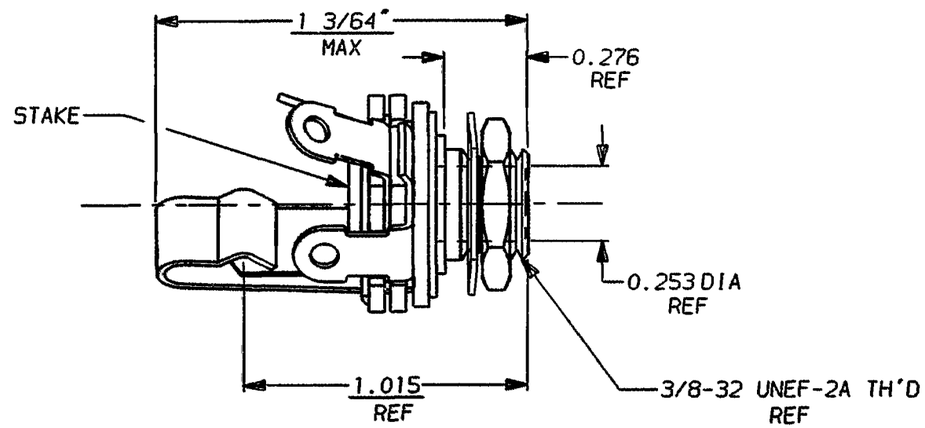

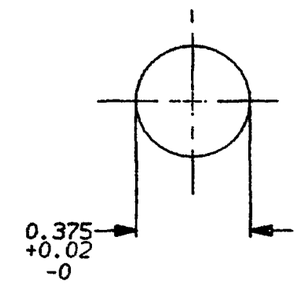

PANEL CUTOUT

CUSTOMER DRAWING
CAD/CAM DWG. NO.
12A.CD
SHEET 1 OF 1

ISSUE	CHANGE NO.	DATE	BY	APP'D
D	ECO #21691	8-19-97	DA	JJ
C	ECO #21337	7-16-97	DA	JF
A	REDRAWN ON CAD	8-26-94	WJS	

REVISIONS

☆ STAR SYMBOL DENOTES CRITICAL DIMENSION, SEE S/C ENGINEERING STANDARD ES-0001

UNLESS OTHERWISE SPECIFIED

1. ALL DIMENSIONS IN INCHES
   TWO PLACE DECIMAL ±.01
   THREE PLACE DECIMAL ±.005
   FRACTIONAL DIMENSIONS ±1/64
   ANGLES ±1/2°
   ALL DIA'S CONCENTRIC WITHIN .005 T.I.R.
2. REMOVE ALL BURRS
3. MAKE NO DIMENSIONAL ALLOWANCES FOR APPLIED FINISHES, I.E., PLATING, PAINTING, ETC.
4. HOLES ON THE SAME CENTERLINE MUST BE ALIGNED WITHIN ±.002

DO NOT SCALE DRAWING

THIS DRAWING DESCRIBES A DESIGN CONSIDERED PROPRIETARY IN NATURE, DEVELOPED AND MANUFACTURED BY SWITCHCRAFT INC. AND IS RELEASED ON A CONFIDENTIAL BASIS FOR IDENTIFICATION PURPOSE ONLY.

SIZE	WIDTH	MULT	LBS./M	TEMPER
.	.	.	.	.

FINISH . SPEC. NO. .
MATERIAL . SPEC. NO. .
FIRST USED ON . SCALE 1 = 0.5

DATE DRAWN	BY	CHK'D	APP'D
8-26-94	WJS	CJD 5-27-64	LG 6-2-64

Switchcraft®

NAME LITTEL-JAX
PART NO. 12A
ISSUE D

(B) ROUTING