Chipsmall Limited consists of a professional team with an average of over 10 year of expertise in the distribution of electronic components. Based in Hongkong, we have already established firm and mutual-benefit business relationships with customers from,Europe,America and south Asia,supplying obsolete and hard-to-find components to meet their specific needs.

With the principle of “Quality Parts,Customers Priority,Honest Operation,and Considerate Service”,our business mainly focus on the distribution of electronic components. Line cards we deal with include Microchip,ALPS,ROHM,Xilinx,Pulse,ON,Everlight and Freescale. Main products comprise IC,Modules,Potentiometer,IC Socket,Relay,Connector.Our parts cover such applications as commercial,industrial, and automotives areas.

We are looking forward to setting up business relationship with you and hope to provide you with the best service and solution. Let us make a better world for our industry!

Contact us

Tel: +86-755-8981 8866 Fax: +86-755-8427 6832
Email & Skype: info@chipsmall.com Web: www.chipsmall.com
Address: A1208, Overseas Decoration Building, #122 Zhenhua RD., Futian, Shenzhen, China

130003

MALE FACE VIEW		
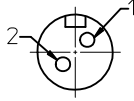	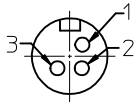	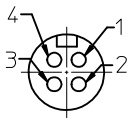
1-BLACK 2-WHITE	1-BLACK 2-WHITE 3-GREEN	1-BLACK 2-GREEN 3-RED 4-WHITE

POLES	MATERIAL NO.	ENGINEERING NO.	FINISHED LENGTH
2	1300030008	32017	12.00 +.75-0 (305mm +19mm-0)
3	1300030023	32317	12.00 +.75-0 (305mm +19mm-0)
4	1300030048	32632	12.00 +.75-0 (305mm +19mm-0)

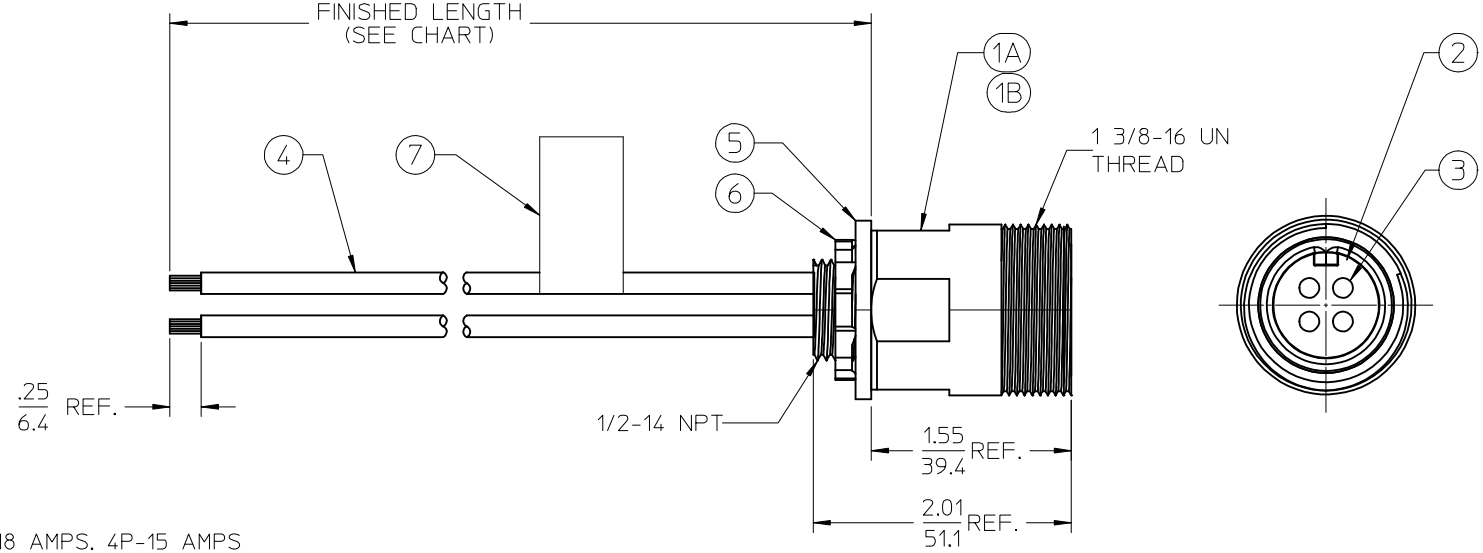

NOTES:
1. MATERIAL: SEE TABLE
2. FINISHES: SEE TABLE
3. ELECTRICAL SPECIFICATIONS
   VOLTAGE RATING: 600V AC/DC
   CURRENT RATING: 2P-18 AMPS, 3P-18 AMPS, 4P-15 AMPS
4. XX REFERS TO POLE COUNT
5. PROTECTION: IP67
6. ASSEMBLY IS RoHS COMPLIANT BY EXEMPTION

ITEM	QTY.	DESCRIPTION	MATERIAL	FINISH
7	1	FLAG LABEL	VINYL	BLACK/YELLOW
6	1	LOCKNUT	STEEL	ZINC PLATED
5	1	GASKET	NEOPRENE	BLACK
4	XX	WIRE, 14 AWG, UL 1015	PVC INSULATION	SEE FACE VIEW
3	XX	CONTACT PIN	Cu ALLOY	UN-PLATED
2	1	INSERT	RUBBER	YELLOW
1B	1	RECEPTACLE SHELL	OPT: ALUMINUM	CLEAR ANODIZE
1A	1	RECEPTACLE SHELL	NYLON	BLACK

UPDATED RECEPT SHELL
EC NO: IPG2016-0945 2015/12/29
DRWN:GGUSTAFSON 2016/05/16
CH'KD:VOU 2016/05/27
APPR:BWOODMAN
DESCRIPTION
REV B

QUALITY SYMBOLS
▼=0
Ⓒ=0

GENERAL TOLERANCES (UNLESS SPECIFIED)

	mm	INCH
4 PLACES	± ---	± ---
3 PLACES	± ---	± .005
2 PLACES	± .13	± .01
1 PLACE	± .25	± ---
0 PLACE	± ---	± ---

ANGULAR ± 2 °
DRAFT WHERE APPLICABLE MUST REMAIN WITHIN DIMENSIONS

DIMENSION STYLE: IN/MM
SCALE: 1:1
DESIGN UNITS: INCH
THIRD ANGLE PROJECTION

DRAWN BY: RSTONE DATE: 2012/11/28
CHECKED BY: K.JOZWIK DATE: 2013/01/16
APPROVED BY: JFMURPHY DATE: 2013/03/01

TITLE: QUICK CHANGE RECEPTACLE MALE 2-3 POLE, 14 AWG

molex

MATERIAL NO.: SEE CHART
DOCUMENT NO.: SD-130003-003
SHEET NO.: 1 OF 1
SIZE: B

THIS DRAWING CONTAINS INFORMATION THAT IS PROPRIETARY TO MOLEX INCORPORATED AND SHOULD NOT BE USED WITHOUT WRITTEN PERMISSION

tb_frame_B_P_AM_T
Rev E1 2012/01/25