Chipsmall Limited consists of a professional team with an average of over 10 year of expertise in the distribution of electronic components. Based in Hongkong, we have already established firm and mutual-benefit business relationships with customers from,Europe,America and south Asia,supplying obsolete and hard-to-find components to meet their specific needs.

With the principle of “Quality Parts,Customers Priority,Honest Operation,and Considerate Service”,our business mainly focus on the distribution of electronic components. Line cards we deal with include Microchip,ALPS,ROHM,Xilinx,Pulse,ON,Everlight and Freescale. Main products comprise IC,Modules,Potentiometer,IC Socket,Relay,Connector.Our parts cover such applications as commercial,industrial, and automotives areas.

We are looking forward to setting up business relationship with you and hope to provide you with the best service and solution. Let us make a better world for our industry!

Contact us

Tel: +86-755-8981 8866 Fax: +86-755-8427 6832
Email & Skype: info@chipsmall.com Web: www.chipsmall.com
Address: A1208, Overseas Decoration Building, #122 Zhenhua RD., Futian, Shenzhen, China

PART NUMBER	ENGINEERING NUMBER	FINISH LENGTH
1300060833	104000A05M020	6′ 6″ +3.50″ -0 [2M +88.9 -0]
1300060839	104000A05M050	16′ 4″ +6.50″ -0 [5M +165.1 -0]
1300060847	104000A05M100	32′ 4″ +12.50″ -0 [10M +317.5 -0]
1300060850	104000A05M150	49′ 2″ +24.50″ -0 [15M +622.3 -0]
1300060851	104000A05M250	82′ 0″ +24.50″ -0 [30M +622.3 -0]

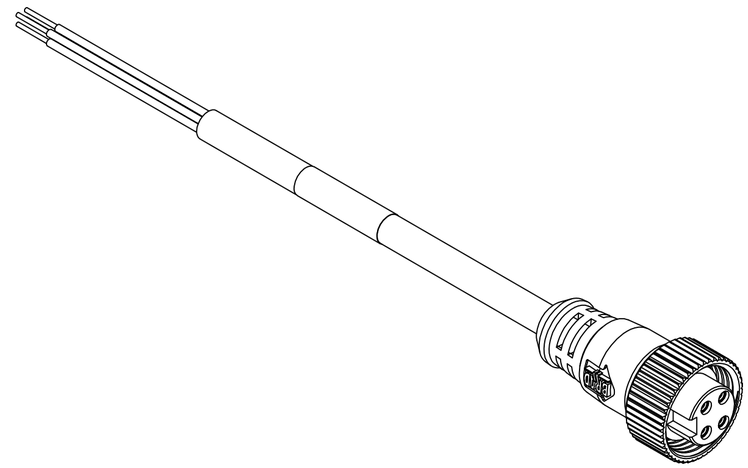

NOTE

1) MATERIAL: SEE TABLE
2) FINISHES: SEE TABLE
3) WRAP LABEL IS MARKED WITH P/N, DATE CODE, VOLTAGE & AMPERAGE
4) MATES WITH: MINI CHANGE, 4 POLE RECEPTACLE
5) ELECTRICAL DATA:
   INLINE CORDSET
   FEMALE A-SIZE WITH FLYING LEADS
   18AWG UNSHIELDED
   POLES: 4
   MAX. VOLTAGE: 300V
   MAX. CURRENT 5.6A
   PROTECTION IP67
   TEMPERATURE RANGE: -20°C TO 105°C
6) PACKAGING:
   CABLE ASSEMBLIES ARE BAGGED SEPERATELY IN POLY BAGS WITH BAR CODE LABEL ATTACHED TO OUTSIDE OF BAG.
7)ASSEMBLY IS RoHS COMPLIANT.
8)CERTIFICATION
   CSA CERTIFIED, FILE NO. LR6837

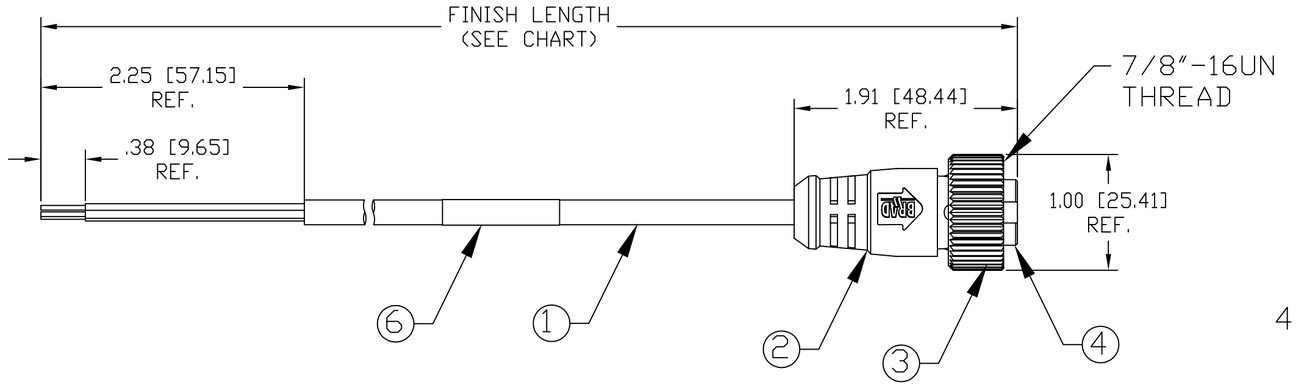

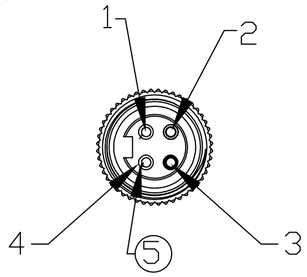

FEMALE
FACE VIEW

P1

1	BLACK
2	BLUE
3	BROWN
4	WHITE

WIRING DIAGRAM

ITEM	QTY.	DESCRIPTION	MATERIAL	FINISH
6	1	LABEL	PLASTIC FILM	BLACK/YELLOW
5	4	CONTACT SOCKET	COPPER ALLOY	GOLD PLATED
4	1	INSERT	PVC	YELLOW
3	1	COUPLING NUT	ZINC DIE CAST	BLACKE-COATED
2	1	OVERMOLD	PVC	YELLOW
1	1	CABLE, 18AWG-4	PVC	YELLOW

RELEASE
EC NO: WNA2010-0025
DRWN: TWOLDEGE 7/22/09
CH'KD: BWOODMAN —
APPR: JFMURPHY 2009/08/10
DESCRIPTION
REV A

QUALITY SYMBOL
▼=0
Ⓒ=0

GENERAL TOLERANCES (UNLESS SPECIFIED)

	mm	INCH
4 PLACES	±----	±---
3 PLACES	±.005	±.005
2 PLACES	±.013	±.010
1 PLACE	±.025	±.020
ANGULAR ±1/2°		

DRAFT WHERE APPLICABLE MUST REMAIN WITHIN DIMENSIONS

DIMENSION STYLE: IN/MM
SCALE: 1:1
DESIGN UNITS: INCH
THIRD ANGLE PROJECTION

DRAWN BY: TWOLDEGE DATE: 2009/07/21
CHECKED BY: BWOODMAN DATE: 2009/07/21
APPROVED BY: ---- DATE: ----

TITLE: MINI CHANGE ASSEMBLY 4-POLE FEMALE ST 18/4AWG PVC

molex MOLEX INCORPORATED

MATERIAL NO.: SEE CHART
DOCUMENT NO.: SD-130006-012
SHEET NO.: 1 0F 1
SIZE: C

THIS DRAWING CONTAINS INFORMATION THAT IS PROPRIETARY TO MOLEX INCORPORATED AND SHOULD NOT BE USED WITHOUT WRITTEN PERMISSION