Chipsmall Limited consists of a professional team with an average of over 10 year of expertise in the distribution of electronic components. Based in Hongkong, we have already established firm and mutual-benefit business relationships with customers from,Europe,America and south Asia,supplying obsolete and hard-to-find components to meet their specific needs.

With the principle of “Quality Parts,Customers Priority,Honest Operation,and Considerate Service”,our business mainly focus on the distribution of electronic components. Line cards we deal with include Microchip,ALPS,ROHM,Xilinx,Pulse,ON,Everlight and Freescale. Main products comprise IC,Modules,Potentiometer,IC Socket,Relay,Connector.Our parts cover such applications as commercial,industrial, and automotives areas.

We are looking forward to setting up business relationship with you and hope to provide you with the best service and solution. Let us make a better world for our industry!

# Contact us

Tel: +86-755-8981 8866 Fax: +86-755-8427 6832
Email & Skype: info@chipsmall.com Web: www.chipsmall.com
Address: A1208, Overseas Decoration Building, #122 Zhenhua RD., Futian, Shenzhen, China

| PART NUMBER | ENGINEERING NUMBER | FINISH LENGTH |
|---|---|---|
| 1300060898 | 104001A01F030 | 3.00' +1.75" -0 [.9M +44.5 -0] |
| 1300060902 | 104001A01F060 | 6.00' +3.50" -0 [1.8M +88.9 -0] |
| 1300060905 | 104001A01F120 | 12.00' +6.50" -0 [3.7M +165.1 -0] |
| 1300060912 | 104001A01F200 | 20.00' +6.50" -0 [6.1M +165.1 -0] |

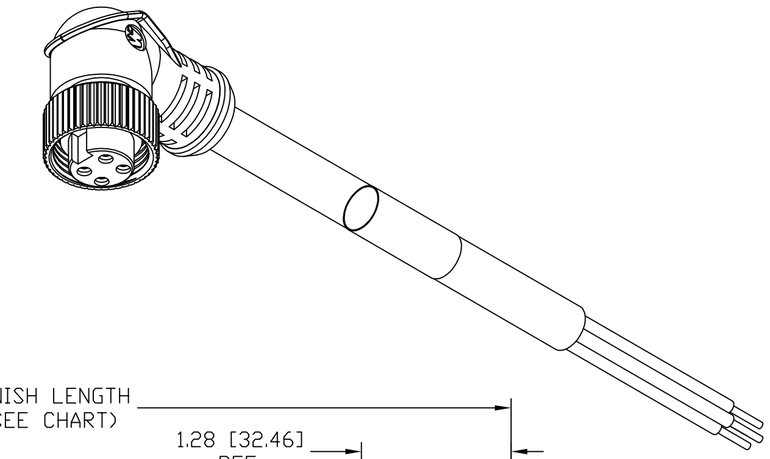

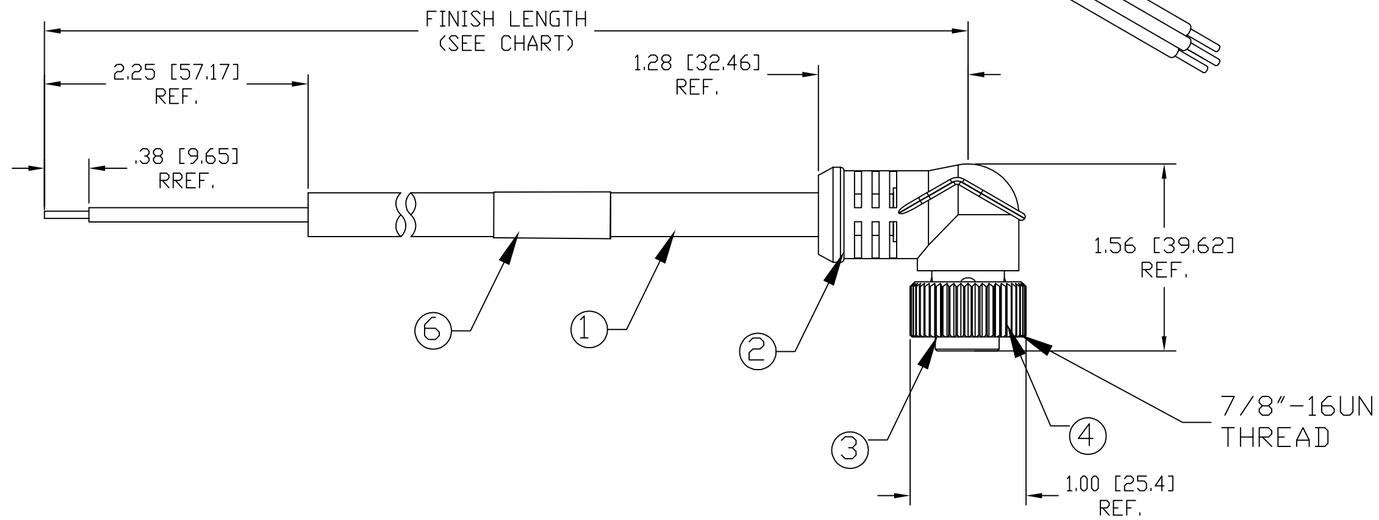


NOTE

1) MATERIAL: SEE TABLE
2) FINISHES: SEE TABLE
3) WRAP LABEL IS MARKED WITH P/N, DATE CODE, VOLTAGE & AMPERAGE
4) MATES WITH: MINI CHANGE, 4 POLE RECEPTACLE
5) ELECTRICAL DATA:
   INLINE CORDSET
   FEMALE A-SIZE WITH FLYING LEADS
   16AWG UNSHIELDED
   POLES: 4
   MAX. VOLTAGE: 600V
   MAX. CURRENT 10A
   PROTECTION IP67
   TEMPERATURE RANGE: -20°C TO 105°C
6) PACKAGING:
   CABLE ASSEMBLIES ARE BAGGED SEPERATELY IN POLY BAGS WITH BAR CODE LABEL ATTACHED TO OUTSIDE OF BAG.
7)ASSEMBLY IS RoHS COMPLIANT.
8)CERTIFICATION
   UL RECOGNIZED, FILE NO. E152210
   CSA CERTIFIED, FILE NO. LR6837

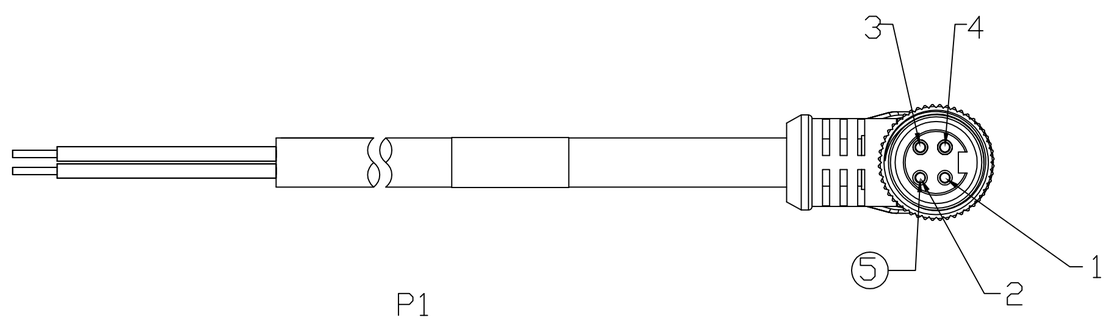


FEMALE FACE VIEW

P1

| | |
|---|---|
| 1 | BLACK |
| 2 | WHITE |
| 3 | RED |
| 4 | GREEN-GRD |

WIRING DIAGRAM

| ITEM | QTY. | DESCRIPTION | MATERIAL | FINISH |
|---|---|---|---|---|
| 6 | 1 | LABEL | PLASTIC FILM | BLACK/YELLOW |
| 5 | 4 | CONTACT SOCKET | COPPER ALLOY | GOLD PLATED |
| 4 | 1 | INSERT | PVC | YELLOW |
| 3 | 1 | COUPLING NUT | ZINC DIE CAST | BLACKE-COATED |
| 2 | 1 | OVERMOLD | PVC | YELLOW |
| 1 | 1 | CABLE, 16AWG-4 TYPE STOOW | PVC | YELLOW |

RELEASE
EC NO: WNA2010-0070 7/29/09
DRWN: TWOLDEGE —
CH'KD: BWOODMAN
APPR: JFMURPHY 2009/08/10
DESCRIPTION
REV A

QUALITY SYMBOL
▼=0
C=0

GENERAL TOLERANCES (UNLESS SPECIFIED)

| | mm | INCH |
|---|---|---|
| 4 PLACES | ±---- | ±--- |
| 3 PLACES | ±.005 | ±.005 |
| 2 PLACES | ±.013 | ±.010 |
| 1 PLACE | ±.025 | ±.020 |
| ANGULAR ±1/2° | | |

DRAFT WHERE APPLICABLE MUST REMAIN WITHIN DIMENSIONS

DIMENSION STYLE: IN/MM
SCALE: 1:1
DESIGN UNITS: INCH
THIRD ANGLE PROJECTION

DRAWN BY: TWOLDEGE DATE: 2009/07/29
CHECKED BY: BWOODMAN DATE: 2009/07/29
APPROVED BY: ---- DATE: ----

TITLE: MINI CHANGE ASSEMBLY 4-POLE FEMALE 90D 16/4AWG PVC

molex MOLEX INCORPORATED

MATERIAL NO.: SEE CHART
DOCUMENT NO.: SD-130006-016
SHEET NO.: 1 0F 1
SIZE: C

THIS DRAWING CONTAINS INFORMATION THAT IS PROPRIETARY TO MOLEX INCORPORATED AND SHOULD NOT BE USED WITHOUT WRITTEN PERMISSION