Chipsmall Limited consists of a professional team with an average of over 10 year of expertise in the distribution of electronic components. Based in Hongkong, we have already established firm and mutual-benefit business relationships with customers from,Europe,America and south Asia,supplying obsolete and hard-to-find components to meet their specific needs.

With the principle of “Quality Parts,Customers Priority,Honest Operation,and Considerate Service”,our business mainly focus on the distribution of electronic components. Line cards we deal with include Microchip,ALPS,ROHM,Xilinx,Pulse,ON,Everlight and Freescale. Main products comprise IC,Modules,Potentiometer,IC Socket,Relay,Connector.Our parts cover such applications as commercial,industrial, and automotives areas.

We are looking forward to setting up business relationship with you and hope to provide you with the best service and solution. Let us make a better world for our industry!

Contact us

Tel: +86-755-8981 8866 Fax: +86-755-8427 6832
Email & Skype: info@chipsmall.com Web: www.chipsmall.com
Address: A1208, Overseas Decoration Building, #122 Zhenhua RD., Futian, Shenzhen, China

FACE VIEW-FEMALE INSERT

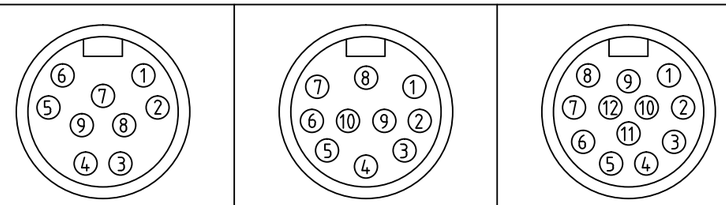

1 ORANGE	1 ORANGE	1 ORANGE
2 BLUE	2 BLUE	2 BLUE
3 RED/BLACK	3 WHITE/BLACK	3 WHITE/BLACK
4 GREEN/BLACK	4 RED/BLACK	4 RED/BLACK
5 WHITE	5 GREEN/BLACK	5 GREEN/BLACK
6 RED	6 ORANGE/BLACK	6 ORANGE/BLACK
7 GREEN/YELLOW	7 RED	7 BLUE/BLACK
8 WHITE/BLACK	8 GREEN/YELLOW	8 BLACK/WHITE
9 BLACK	9 BLACK	9 GREEN/YELLOW
	10 WHITE	10 RED
		11 WHITE
		12 BLACK

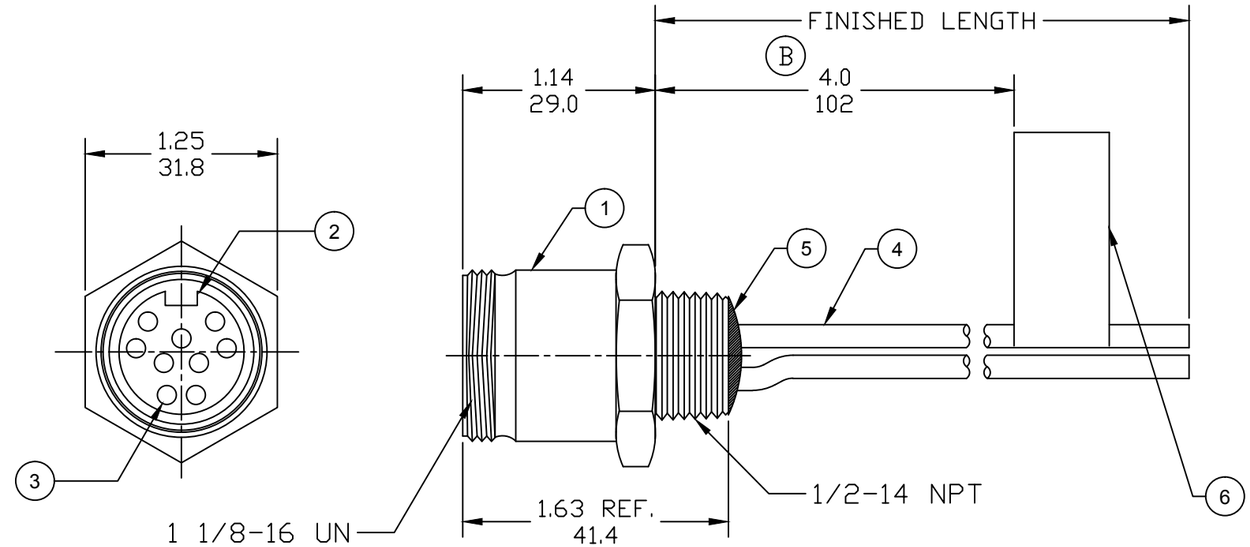

NOTES: B

1. MATERIAL: AS NOTED
2. FINISH: AS NOTED
3. ELECTRICAL:
   VOLTAGE: 250V PER IEC60664
   600V PER UL2238
   CURRENT: 9 POLE: 7A
   10 POLE: 7A
   12 POLE: 5A
4. TEMP RATING: -20°TO +105°C
5. PROTECTION: IP67 (WHEN MATED)
6. DIMS ARE FOR REFERENCE
   UNLESS OTHERWISE NOTED

B PART NUMBER LEGEND

3R1004A20F0101

POLES
9= 9 POLES
1=10 POLES
2=12 POLES

LENGTH:
A120= 12 INCHES
F001= .1 FT
F020= 2 FT
F200= 20 FT

M005= 0.5 METER
M010= 1 METER
M100= 10 METER

COUPLING: BLANK= STD (SEE BOM)
1= 303 STAINLESS ST.

ITEM	DESCRIPTION	MATERIAL	FINISH
6	FLAG LABEL	VINYL	BLACK/YELLOW
5	POTTING MATERIAL	EPOXY	
4	WIRE, 16 AWG UL (1015)	PVC INSULATION	SEE CHART
3	CONTACT SOCKET	COPPER ALLOY	GOLD PLATED
2	FEMALE INSERT (C-SIZE)	PVC	YELLOW
1	RECEPTACLE SHELL	ZINC DIE-CAST	BLACK

REV	DESCRIPTION
B	REV'D NOTES 3 & 6, P/N LEGEND EC NO: IPG2017-0578 12/8/16 DRWN: RSTONE 2016/12/15 CH'KD: K COX APPR: BWOODMAN 2016/08/19

QUALITY SYMBOLS
▼=0
(C)=0

GENERAL TOLERANCES (UNLESS SPECIFIED)

	mm	INCH
4 PLACES	±---	±---
3 PLACES	±---	±---
2 PLACES	±---	±---
1 PLACE	±---	±---
ANGULAR ±2°		

DRAFT WHERE APPLICABLE MUST REMAIN WITHIN DIMENSIONS

DIMENSION STYLE: IN/MM
SCALE: ---
DESIGN UNITS: INCH
THIRD ANGLE PROJECTION

DRAWN BY: RSTONE DATE: 2016/07/11
CHECKED BY: K COX DATE: 2016/12/15
APPROVED BY: TWOLDEGE DATE: 2016/08/19
MATERIAL NO.: -

TITLE: MINI-CHANGE RECEPTACLE 9, 10 & 12 POLE, FEMALE 16 AWG

MOLEX INCORPORATED

DOCUMENT NO.: SD-130015-026
SHEET NO.: 1 OF 1

SIZE: B

THIS DRAWING CONTAINS INFORMATION THAT IS PROPRIETARY TO MOLEX INCORPORATED AND SHOULD NOT BE USED WITHOUT WRITTEN PERMISSION