Chipsmall Limited consists of a professional team with an average of over 10 year of expertise in the distribution of electronic components. Based in Hongkong, we have already established firm and mutual-benefit business relationships with customers from,Europe,America and south Asia,supplying obsolete and hard-to-find components to meet their specific needs.

With the principle of “Quality Parts,Customers Priority,Honest Operation,and Considerate Service”,our business mainly focus on the distribution of electronic components. Line cards we deal with include Microchip,ALPS,ROHM,Xilinx,Pulse,ON,Everlight and Freescale. Main products comprise IC,Modules,Potentiometer,IC Socket,Relay,Connector.Our parts cover such applications as commercial,industrial, and automotives areas.

We are looking forward to setting up business relationship with you and hope to provide you with the best service and solution. Let us make a better world for our industry!

Contact us

Tel: +86-755-8981 8866 Fax: +86-755-8427 6832
Email & Skype: info@chipsmall.com Web: www.chipsmall.com
Address: A1208, Overseas Decoration Building, #122 Zhenhua RD., Futian, Shenzhen, China

Part Number: 130098-0035

Status: Active

Overview: Strain-Relief Cord Grips

Description: MAX-LOC® Strain Relief Cord-Sealing Grip, 3/8" NPT, 90° Angle Male, Cable Diameter 9.53-11.10mm (.375-.437")

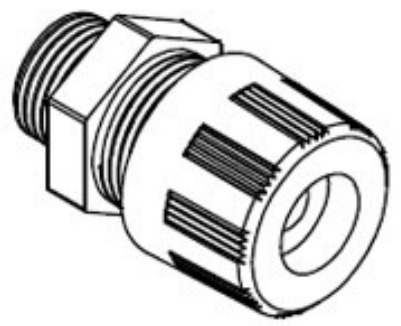

Series

image - Reference only

Documents:
RoHS Certificate of Compliance (PDF)
Product Literature (PDF)

Agency Certification

CSA	LR32159
UL	E76954

General

Product Family	Cable Grips
Series	130098
Eye Type	N/A
Insulated	No
O-Ring	No
Overview	Strain-Relief Cord Grips
Product Literature Order No	987650-8064
Product Name	MAX-LOC®
Type	Strain Relief Grip
UPC	78678872154
Woodhead	Yes

Physical

Approximate Break Strength	N/A
Bale Length	N/A
Body Style	90° Angle
Cable Diameter	9.53-11.10mm (.375-.437")
Color - Grommet	N/A
Gender	Male
Material - Body	Nylon
Material - Grip	N/A
Mesh Length	N/A
Number of Holes	N/A
Thread Size	3/8" NPT

Material Info

Old Part Number	5509

EU RoHS
ELV and RoHS Compliant
REACH SVHC
Not Reviewed
Low-Halogen Status
Not Reviewed

China RoHS

Need more information on product environmental compliance?

Email productcompliance@molex.com
For a multiple part number RoHS Certificate of Compliance, click here

Please visit the Contact Us section for any non-product compliance questions.

Search Parts in this Series
130098Series