Chipsmall Limited consists of a professional team with an average of over 10 year of expertise in the distribution of electronic components. Based in Hongkong, we have already established firm and mutual-benefit business relationships with customers from,Europe,America and south Asia,supplying obsolete and hard-to-find components to meet their specific needs.

With the principle of “Quality Parts,Customers Priority,Honest Operation,and Considerate Service”,our business mainly focus on the distribution of electronic components. Line cards we deal with include Microchip,ALPS,ROHM,Xilinx,Pulse,ON,Everlight and Freescale. Main products comprise IC,Modules,Potentiometer,IC Socket,Relay,Connector.Our parts cover such applications as commercial,industrial, and automotives areas.

We are looking forward to setting up business relationship with you and hope to provide you with the best service and solution. Let us make a better world for our industry!

Contact us

Tel: +86-755-8981 8866 Fax: +86-755-8427 6832
Email & Skype: info@chipsmall.com Web: www.chipsmall.com
Address: A1208, Overseas Decoration Building, #122 Zhenhua RD., Futian, Shenzhen, China

MATERIAL NO.	ENGINEERING NO.	LENGTH
1303045003	1303045003	1.0M +55.6mm -0 [3.28' +2.19" -0]
1303045004	1303045004	2.0M +88.9mm -0 [6.56' +3.50" -0]
1303045005	1303045005	3.0M +88.9mm -0 [9.84' +3.50" -0]
1303045007	1303045007	5.0M +165.1mm -0 [16.40' +6.50" -0]
1303045012	1303045012	10.0M +317.5mm -0 [32.81' +12.50" -0]

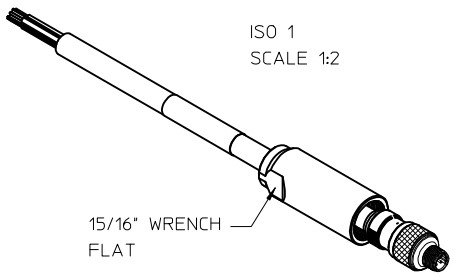

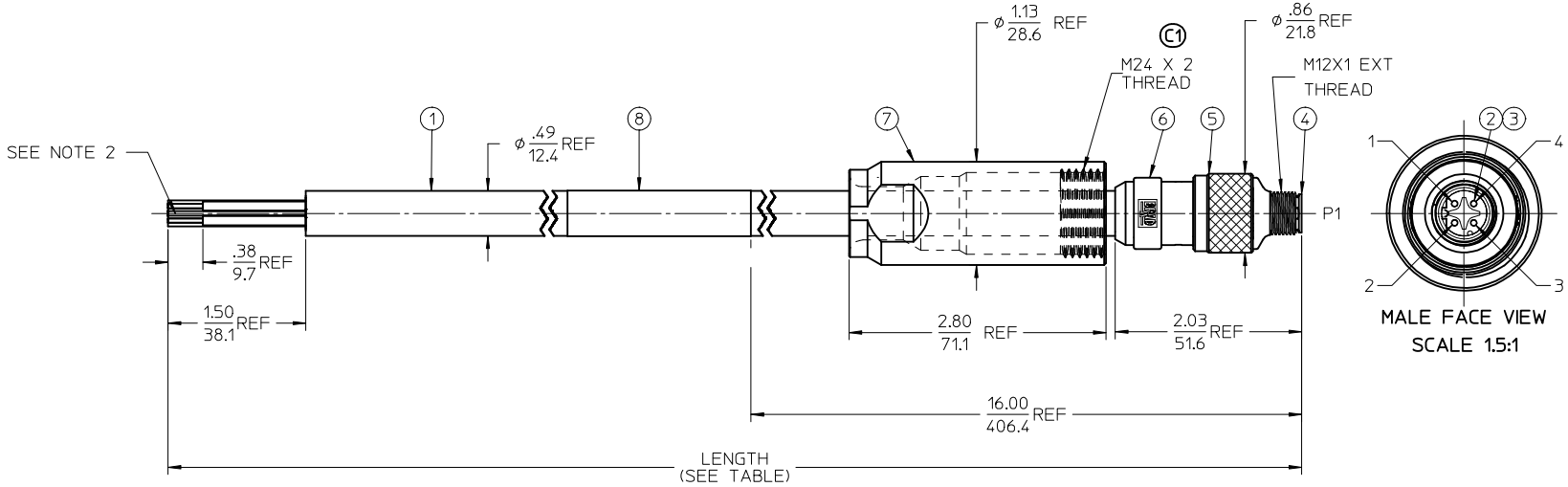

NOTES:
1. COMPLIES WITH SAE J2839
2. FREE END OF STRENGTH MEMBER MUST BE PROPERLY SECURED TO COMPLY WITH SAE J2839
3. ASSEMBLY IS FULLY SHIELDED
4. ELECTRICAL RATINGS:
   VOLTAGE 125V
   CURRENT: 1.5AMPS MAX
5. COUPLING NUT TORQUE: HAND TIGHT
   MIN SUPPORT COVER TORQUE: 20 FT-LBS
   CONNECTOR TENSION BUSHING TORQUE: HAND TIGHT
6. MATERIALS: SEE TABLE
7. FINISHES: SEE TABLE
8. ASSEMBLY IS RoHS COMPLIANT

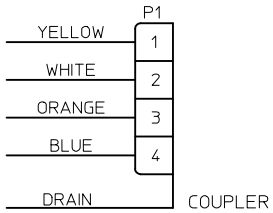

WIRING DIAGRAM
(SEE NOTE 3)

ITEM	QTY	DESCRIPTION	MATERIAL	FINISH
8	1	LABEL	VINYL	YELLOW
7	1	SUPPORT COVER	STAINLESS STEEL	PASSIVATED
6	1	OVERMOLD	PBT	GREY
5	1	MALE COUPLING NUT, M12	STAINLESS STEEL	PASSIVATED
4	1	MALE HOUSING, D-CODE	ZINC DIE-CAST	CHROME
3	1	MALE INSULATOR, 4C	PBT	BLACK
2	4	MALE CONTACT PIN, 18AWG	Cu ALLOY	GOLD PLATED
1	1	CABLE, 18AWG, 4/C, SHIELDED	XRAD XLE JACKET	SEE WIRE DIAGRAM

ERROR THD WAS M20X2
EC NO: IPG2017-0161 2016/08/11
DRWN:RSTONE 2016/08/12
CHKD:K COX
APPR:TWOLDEGEBRI E2016/08/23
DESCRIPTION
C1
REV

QUALITY SYMBOLS
▼=0
(C)=0

GENERAL TOLERANCES (UNLESS SPECIFIED)

	mm	INCH
4 PLACES	± ---	± ---
3 PLACES	± ---	± .005
2 PLACES	± 0.13	± .010
1 PLACE	± 0.25	± .020
ANGULAR ± 1/1°		

DRAFT WHERE APPLICABLE MUST REMAIN WITHIN DIMENSIONS

DIMENSION STYLE: IN/MM
SCALE: 1:1
DESIGN UNITS: INCH
THIRD ANGLE PROJECTION

DRAWN BY: LHARTMANN DATE: 2011/01/14
CHECKED BY: VOU DATE: 2011/02/22
APPROVED BY: BWOODMAN DATE: 2015/12/02
MATERIAL NO.: SEE TABLE

TITLE: M12 EX 300LB PORTABLE 4P M/MP ST E-NET #18/4 BLACK XLPE CABLE

molex MOLEX INCORPORATED

DOCUMENT NO.: SD-130304-021
SHEET NO.: 1 OF 1
SIZE: C

THIS DRAWING CONTAINS INFORMATION THAT IS PROPRIETARY TO MOLEX INCORPORATED AND SHOULD NOT BE USED WITHOUT WRITTEN PERMISSION