Chipsmall Limited consists of a professional team with an average of over 10 year of expertise in the distribution of electronic components. Based in Hongkong, we have already established firm and mutual-benefit business relationships with customers from,Europe,America and south Asia,supplying obsolete and hard-to-find components to meet their specific needs.

With the principle of “Quality Parts,Customers Priority,Honest Operation,and Considerate Service”,our business mainly focus on the distribution of electronic components. Line cards we deal with include Microchip,ALPS,ROHM,Xilinx,Pulse,ON,Everlight and Freescale. Main products comprise IC,Modules,Potentiometer,IC Socket,Relay,Connector.Our parts cover such applications as commercial,industrial, and automotives areas.

We are looking forward to setting up business relationship with you and hope to provide you with the best service and solution. Let us make a better world for our industry!

Contact us

Tel: +86-755-8981 8866 Fax: +86-755-8427 6832
Email & Skype: info@chipsmall.com Web: www.chipsmall.com
Address: A1208, Overseas Decoration Building, #122 Zhenhua RD., Futian, Shenzhen, China

NUMBER 1318985

三角法 (3rd ANGLE PROJECTION)

METRIC

単位：特 DIMENSIONS IN MM. DO NOT SCALE PRINT

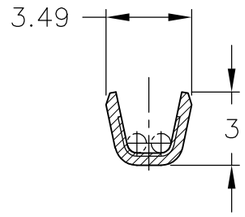

断面 "A"－"A"

SECT "A"-"A"

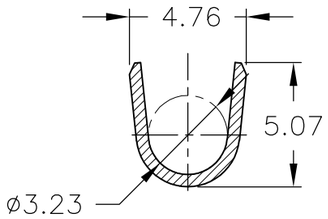

断面 "B"－"B"

SECT "B"-"B"

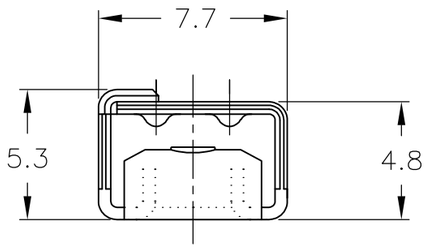

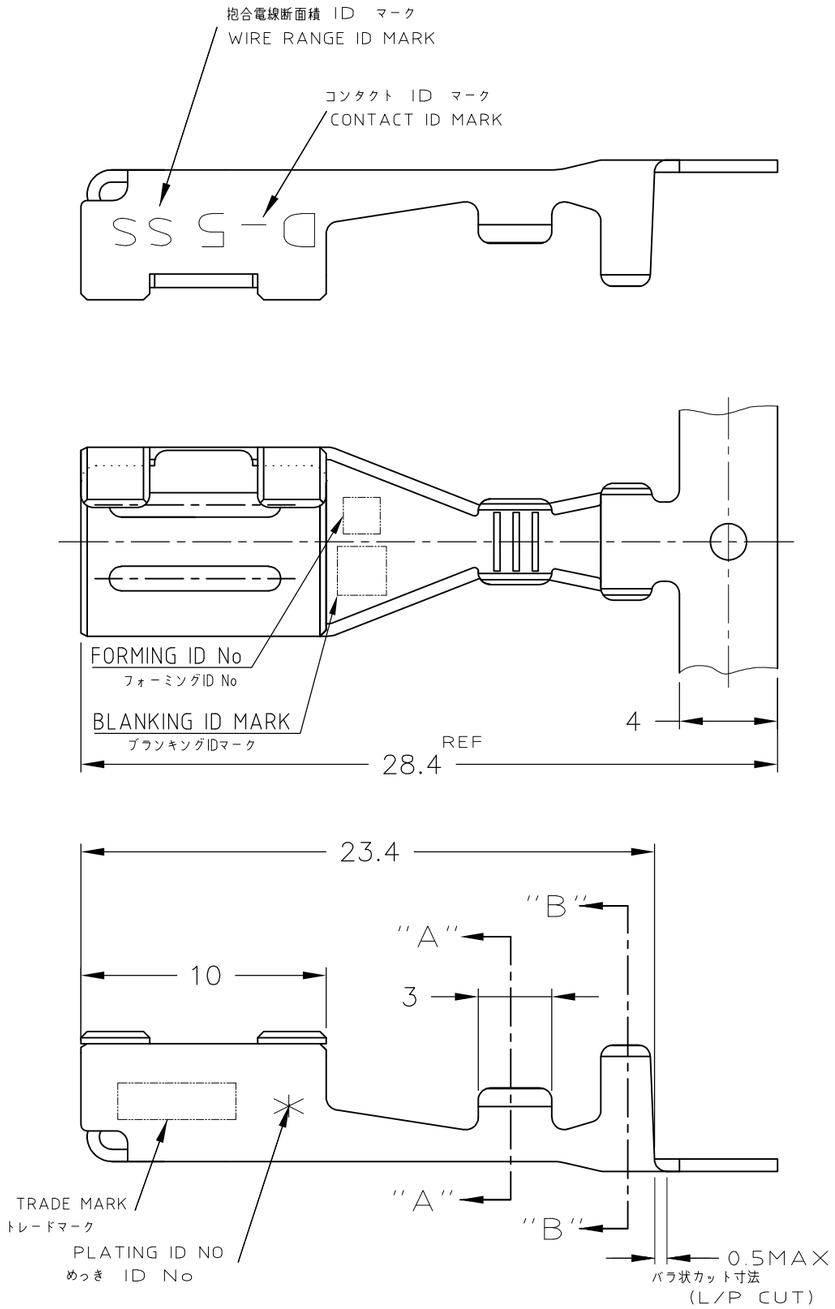

注記

1. めっき：コンタクト
全面Ni下地の上に
全面2.54 μmMIN 銀めっき

2. めっき：コンタクト
全面Ni下地の上に
接触部0.38 μmMIN 金めっき

3. めっき：コンタクト
全面Ni下地の上に
接触部0.76 μmMIN 金めっき

製品規格：108－5453

取付け適用規格：114－5206

NOTES

1. FINISH(CONTACT AREA):ALL OVER 2.54μmMIN
SILVER PLATING OVER Ni PLATING.

2. FINISH(CONTACT AREA):0.38μmMIN
GOLD PLATING OVER Ni PLATING.

3. FINISH(CONTACT AREA):0.76μmMIN
GOLD PLATING OVER Ni PLATING.

PRODUCT SPEC. 108-5453

APPLICATION SPEC. 114-5206

めっき ID No / PL ID CODE	仕上(FINISH)	バラ状 L/P	連鎖状 STRIPPED
3	3	1318986－3	1318985－3
2	2	1318986－2	1318985－2
6	1	1318986－6	1318985－6
		型番(P/N)	

LTR	変更 (REVISION RECORD)	DR	CHK	DATE
B	REVISED(ECR-15-012875)	K.K	E.T	2SEP 2015
A	REVISED(ECR-15-005610)	K.K	N.Y	14APR 2015
01	REVISED(FJD0-0178-03)	K.R	S.M	23JUN '03
0	RELEASED(FJ00-0887-99)	K.I	Y.K	10.FEB '00

TE Connectivity

抱合電線断面積 (WIRE RANGE)	AWG #20/#18/#16
被覆外径 (INSULATION DIA.)	1.8～3.23 mmø
材料 (MATERIAL)	銅合金 (COPPER ALLOY)
仕上 (FINISH)	表参照 (SEE TABLE)
DR. 10/FEB/'00	K.Ikeda
DE. 10/FEB/'00	K.Ikeda
CHK. 10/FEB/'00	Y.Kato
APP. 10/FEB/'00	I.Hasegawa

名称 (NAME) REC CONTACT "SS" SIZE
リセ コンタクト "SS" サイズ
<DYNAMIC D-5 SERIES>

一般公差 (GENERAL TOLERANCE)
10以下 : ±0.3
10を超え 30以下 : ±0.35
30を超え100以下 : ±0.4
角度 : ±3°

SIZE A3 | LOC J | 番号(No.) C- 1318985

尺度 (SCALE) 4－1 | REV. B | SHEET 1 OF 1

PRINT DIST

AMP-J
REV.10/'83

(CUSTOMER DRAWING) 顧客用図面