Chipsmall Limited consists of a professional team with an average of over 10 year of expertise in the distribution of electronic components. Based in Hongkong, we have already established firm and mutual-benefit business relationships with customers from,Europe,America and south Asia,supplying obsolete and hard-to-find components to meet their specific needs.

With the principle of “Quality Parts,Customers Priority,Honest Operation,and Considerate Service”,our business mainly focus on the distribution of electronic components. Line cards we deal with include Microchip,ALPS,ROHM,Xilinx,Pulse,ON,Everlight and Freescale. Main products comprise IC,Modules,Potentiometer,IC Socket,Relay,Connector.Our parts cover such applications as commercial,industrial, and automotives areas.

We are looking forward to setting up business relationship with you and hope to provide you with the best service and solution. Let us make a better world for our industry!

Contact us

Tel: +86-755-8981 8866 Fax: +86-755-8427 6832
Email & Skype: info@chipsmall.com Web: www.chipsmall.com
Address: A1208, Overseas Decoration Building, #122 Zhenhua RD., Futian, Shenzhen, China

PART NUMBER	ITEM ① BODY	ITEM ② CONTACT	ITEM ③ INSULATOR	PACKAGING
133-3711-201	BRASS GOLD PL .00001 MIN OVER NICKEL PL .00005 MIN OVER COPPER PL .00005 MIN	BERYLLIUM COPPER GOLD PL .00003 MIN OVER NICKEL PL .00005 MIN OVER COPPER PL .00005 MIN	TEFLON	BULK PACK 25 PCS
133-3711-202	BRASS GOLD PL .00001 MIN OVER NICKEL PL .00005 MIN OVER COPPER PL .00005 MIN	BERYLLIUM COPPER GOLD PL .00003 MIN OVER NICKEL PL .00005 MIN OVER COPPER PL .00005 MIN	TEFLON	TAPE AND REEL 750 PCS. PER FIG 1
133-3711-207	BRASS TIN PL .00015 MIN OVER NICKEL PL .00003 MIN OVER COPPER PL .00003 MIN	BERYLLIUM COPPER GOLD PL .00003 MIN OVER NICKEL PL .00005 MIN OVER COPPER PL .00005 MIN	TEFLON	BULK PACK 25 PCS
133-3711-208	BRASS TIN PL .00015 MIN OVER NICKEL PL .00003 MIN OVER COPPER PL .00003 MIN	BERYLLIUM COPPER GOLD PL .00003 MIN OVER NICKEL PL .00005 MIN OVER COPPER PL .00005 MIN	TEFLON	TAPE AND REEL 750 PCS. PER FIG 1

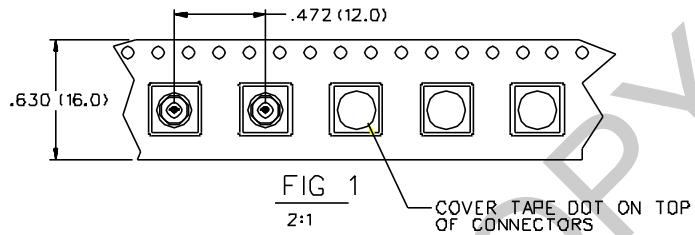

FIG 1
2:1

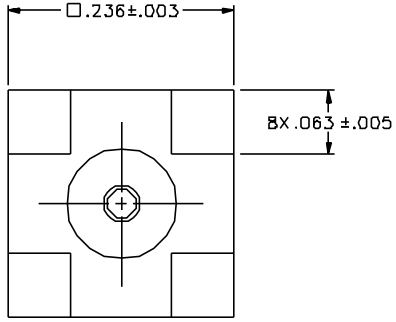

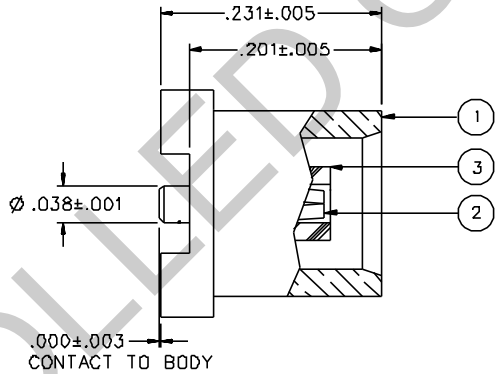

NOTES:

1. SPECIFICATIONS:

IMPEDANCE: 50 OHMS
FREQUENCY RANGE: 0-6 GHz
VSWR: NOT APPLICABLE
WORKING VOLTAGE: 335 VRMS MAX AT SEA LEVEL
DIELECTRIC WITHSTANDING VOLTAGE: 1000 VRMS MIN AT SEA LEVEL
INSULATION RESISTANCE: 10000 MEGOHM MIN
CONTACT RESISTANCE:
CENTER CONTACT - INITIAL 5 MILLIOHM MAX, AFTER ENVIRONMENTAL 8 MILLIOHM MAX
OUTER CONDUCTOR - GOLD PLATED INITIAL 1 MILLIOHM MAX, AFTER ENVIRONMENTAL 1.5 MILLIOHM MAX
NICKEL PLATED INITIAL 2.5 MILLIOHM MAX, AFTER ENVIRONMENTAL 3.5 MILLIOHM MAX
BRAID TO BODY - NOT APPLICABLE
CORONA LEVEL: 250 VOLTS MINIMUM AT 70,000 FEET
INSERTION LOSS: NOT APPLICABLE
RF LEAKAGE: NOT APPLICABLE
RF HIGH POTENTIAL WITHSTANDING VOLTAGE: 600 VRMS AT 4 AND 7 MHZ

MECHANICAL:

ENGAGE/DISENGAGE FORCE: 5.6 LBS MAX ENGAGEMENT
1.0 LB MIN DISENGAGEMENT
8.0 LBS MAX DISENGAGEMENT
CONTACT RETENTION FORCE: 2.3 LBS MIN
CONTACT RETENTION TORQUE: NOT APPLICABLE
COUPLING MECHANISM RETENTION: NOT APPLICABLE
CABLE ACCEPTABILITY: NOT APPLICABLE
CABLE HEX CRIMP SIZE: NOT APPLICABLE
CABLE RETENTION: NOT APPLICABLE
DURABILITY: 500 CYCLES MIN

ENVIRONMENTAL:

(MEETS OR EXCEEDS THE APPLICABLE PARAGRAPH OF MIL-C-39012)
THERMAL SHOCK: MIL-STD-202, METHOD 107, CONDITION F
OPERATING TEMPERATURE: -65 DEG C TO 165 DEG C
CORROSION: MIL-STD-202, METHOD 101, CONDITION B
SHOCK: MIL-STD-202, METHOD 213, CONDITION B
VIBRATION: MIL-STD-202, METHOD 204, CONDITION B
MOISTURE RESISTANCE: MIL-STD-202, METHOD 106

RECOMMENDED SOLDER LAND PATTERN*

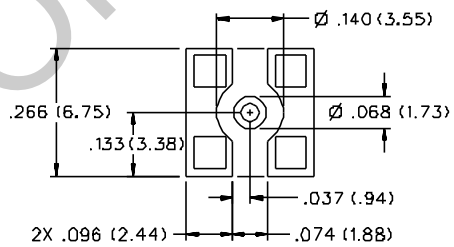

* NOTE: THIS PATTERN IS FOR REFERENCE ONLY. PATTERN MAY VARY DEPENDING ON ASSEMBLY PROCESS, BOARD TYPE, OR SPECIFIC ELECTRICAL OR MECHANICAL REQUIREMENTS.

DRAWING NO.
C - 133-3711-201/210

0	REVISIONS
ENGINEERING RELEASE	
1	8-18-95 RH SWC TAK 8-29-95 ECN 43662
CHANGED: -207 ITEM 1 BODY TIN PL .00015 MIN OVER NICKEL PL .00003 MIN OVER COPPER PL .00003 MIN WAS TIN PL .0002 MIN OVER NICKEL PL .0001 MIN OVER COPPER PL .0005 MIN	
1a	12-5-95 RH WC TAK 12-8-95 ECN 43788
ADDED: TAPE AND REEL PARTS -202 & -208, FIG 1	
1b	1-22-96 RH SWC TAK PB 1-29-96 ECN 43860
CHANGED: 750 PCS WAS 900 PCS	
1c	11-30-98 RH JA TAK 12-4-98 ECN 46029
CHANGED: .000+-.003 WAS .003+-.006	
2	4-5-99 RH TAK RJ ECN 46288
CONTACT RETENTION 2.3 LBS MIN WAS 4.0, MAX ENGAGE 5.6 LBS WAS 3.4 DISENGAGE 1.0 / 8.0 LBS WAS 2.25 / 4.5 LBS. DELETED: INTERFACE PER CECC 22220 DETAIL	
* REVISION NUMBER FOLLOWED BY AN ALPHA * CHARACTER INDICATES DRAWING CLARIFI- * CATION OR PART NUMBER ADDITION ONLY. *	
2a	1-2-01 TAK ECN 47547
ADDED TAPE DOTS TO TAPE AND REEL VERSION.	
3	12-3-01 AK ECN 48105

CUSTOMER DRAWING

THIS DRAWING TO BE INTERPRETED PER ANSI Y 14.5M - 1982

"μSTATION"

COMPANY CONFIDENTIAL

TOLERANCE UNLESS OTHERWISE SPECIFIED	DRAWN BY SWC	DATE 7-24-95	JOHNSON	Cinch Connectivity Solutions 299 Johnson Ave. Ste. 100 Waseca, MN 56093 1-800-247-8256
DECIMALS .XX ___ mm .XXX ___	CHECKED BY SWC	DATE 8-18-95	TITLE JACK ASSEMBLY STRAIGHT SURFACE MOUNT MCX	
MATL	APPROVED BY TAK	DATE 8-22-95		
FINISH	APPROVED BY	DATE	CODE NO.	DRAWING NO. C - 133-3711-201/210
	RELEASE DATE 8-29-95		SCALE 10:1	U/M INCH SHEET 2 OF 2

UNCONTROLLED COPY