Chipsmall Limited consists of a professional team with an average of over 10 year of expertise in the distribution of electronic components. Based in Hongkong, we have already established firm and mutual-benefit business relationships with customers from,Europe,America and south Asia,supplying obsolete and hard-to-find components to meet their specific needs.

With the principle of “Quality Parts,Customers Priority,Honest Operation,and Considerate Service”,our business mainly focus on the distribution of electronic components. Line cards we deal with include Microchip,ALPS,ROHM,Xilinx,Pulse,ON,Everlight and Freescale. Main products comprise IC,Modules,Potentiometer,IC Socket,Relay,Connector.Our parts cover such applications as commercial,industrial, and automotives areas.

We are looking forward to setting up business relationship with you and hope to provide you with the best service and solution. Let us make a better world for our industry!

Contact us

Tel: +86-755-8981 8866 Fax: +86-755-8427 6832
Email & Skype: info@chipsmall.com Web: www.chipsmall.com
Address: A1208, Overseas Decoration Building, #122 Zhenhua RD., Futian, Shenzhen, China

MODEL NO.	PACKAGING
134-1000-026	ONE PCS PER BAG

REV	ECO	DATE
001	ECO-17-0033	12/18/2017

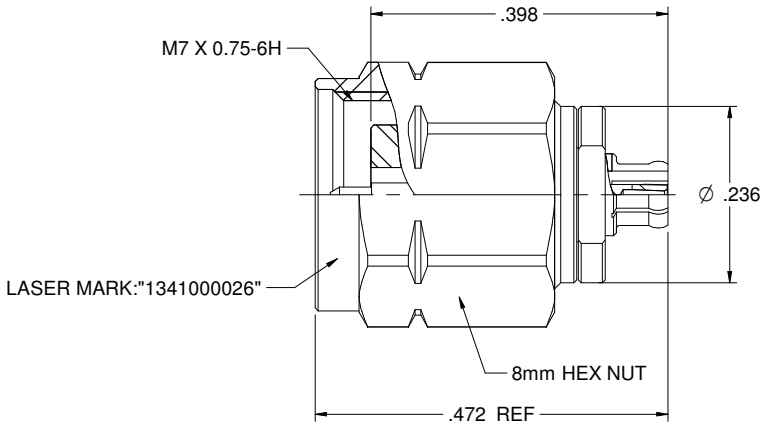

NOTES: UNLESS OTHERWISE SPECIFIED

1. MATERIAL & FINISH:
   1.1 BODY & SHELL: PASSIVATED STAINLESS STEEL
   1.2 CONTACT PIN& CONTACT BODY: GOLD PLATED BERYLLIUM COPPER
   1.3 INSULATOR: ULTEM 1000 AMBER
   1.4 C RING: BERYLLIUM COPPER
   1.5 GASKET: SILICONE RED

2. ELECTRICAL:
   2.1 IMPEDANCE: 50 OHMS
   2.2 FREQUENCY RANGE: 0-67 GHz
   2.3 VOLTAGE STANDING WAVE RATIO: 1.25 MAX
   2.4 CONTACT RESISTANCE: CENTER CONTACT: 6 MILLIOHMS MAX
   OUTER CONTACT: 2.5 MILLIOHMS MAX
   2.5 DIELECTRIC WITHSTANDING VOLTAGE: 325VRMS MIN
   2.6 INSULATION RESISTANCE: 5000 MOHM MIN

3. MECHANICAL:
   3.1 ENGAGEMENT FORCE: 0.23 NM MAX (1.85MM)
   FULL DETENT: 19 N MAX,SMOOTH BORE: 11 N MAX (SMPM)
   3.2 DISENGAGEMENT FORCE: 0.23 NM MAX (1.85MM)
   FULL DETENT: 29 N MAX, SMOOTH BORE: 11N MAX (SMPM)
   3.3 COUPLING PROOF TORQUE: 1.65 NM MIN
   3.4 COUPLING NUT RETENTION: 267 N MIN
   3.5 CONTACT RETENTION: 20 N MIN
   3.6 DURABILITY: 500 CYCLES MIN (1.85MM)
   FULL DETENT: 100 CYCLES MIN, SMOOTH BORE:500 CYCLES MIN (SMPM)

4. ENVIRONMENT:
   4.1 THERMAL SHOCK: MIL-STD-202, METHOD 107, CONDITION B.
   4.2 OPERATING TEMPERATURE: -55 TO 125℃
   4.3 SALT SPRAY: MIL-STD-202, METHOD 101, CONDITION B
   4.4 SHOCK: MIL-STD-202, METHOD 213, CONDITION I
   4.5 VIBRATION: MIL-STD-202, METHOD 204, CONDITION D
   4.6 MOISTURE RESISTANCE: MIL-STD-202, METHOD 106

cinch connectivity solutions

This PROPRIETARY Document is property of Cinch Connectivity Solutions. Information, ideas, and designs contained herein are in confidence and in understanding that it is not to be reproduced or transmitted without expressed written permission.

INTERPRET DRAWING IN ACCORDANCE WITH ASME Y14.5-2009

Model No. 134-1000-026

RoHS2 ☑ 2011/65/EU

Cage Code

3RD ANGLE PROJECTION

UNLESS OTHERWISE SPECIFIED UNITS INCH

.XXX ±.02
.XXXX ±.01
ANGLES ±5°

Drawn by: Betty.Yu

Date: 12/12/2017

Johnson

Title: ADAPTER ASSEMBLY,1.85mm PLUG TO SMPM JACK

Drawing No. 134-1000-026

Rev. 001

Size C | DO NOT SCALE DRAWING | Workmanship Std NONE | Sheet 1 of 1