Chipsmall Limited consists of a professional team with an average of over 10 year of expertise in the distribution of electronic components. Based in Hongkong, we have already established firm and mutual-benefit business relationships with customers from,Europe,America and south Asia,supplying obsolete and hard-to-find components to meet their specific needs.

With the principle of “Quality Parts,Customers Priority,Honest Operation,and Considerate Service”,our business mainly focus on the distribution of electronic components. Line cards we deal with include Microchip,ALPS,ROHM,Xilinx,Pulse,ON,Everlight and Freescale. Main products comprise IC,Modules,Potentiometer,IC Socket,Relay,Connector.Our parts cover such applications as commercial,industrial, and automotives areas.

We are looking forward to setting up business relationship with you and hope to provide you with the best service and solution. Let us make a better world for our industry!

Contact us

Tel: +86-755-8981 8866 Fax: +86-755-8427 6832
Email & Skype: info@chipsmall.com Web: www.chipsmall.com
Address: A1208, Overseas Decoration Building, #122 Zhenhua RD., Futian, Shenzhen, China

MODEL NO.	PACKAGING
134-1010-002	ONE PCS PER BAG

REV	ECO	DATE
001	ECO-17-0032	11/28/2017

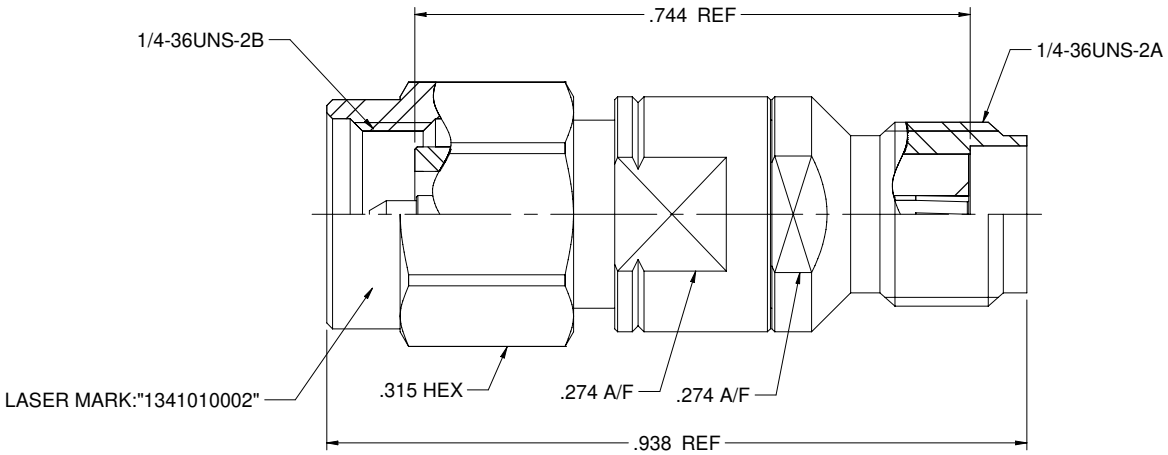

NOTES: UNLESS OTHERWISE SPECIFIED

1. MATERIAL & FINISH:
   1.1 BODY & SHELL: PASSIVATED STAINLESS STEEL
   1.2 CONTACT PIN: GOLD PLATED BERYLLIUM COPPER
   1.3 INSULATOR: PTFE WHITE
   1.4 C RING: BERYLLIUM COPPER
   1.5 GASKET: SILICONE RED

2. ELECTRICAL:
   2.1 IMPEDANCE: 50 OHMS
   2.2 FREQUENCY RANGE: 0-26.5 GHz
   2.3 VOLTAGE STANDING WAVE RATIO: 1.3 MAX
   2.4 DIELECTRIC WITHSTADING VOLTAGE: 750 VRMS MIN
   2.5 CONTACT RESISTANCE:
      2.5.1 CENER CONTACT: 3 MILLIOHM MAX
      2.5.2 OUTER CONTACT: 2 MILLIOHM MAX
   2.6 INSULATOR RESISTANCE: 5000 MEGOHM MIN

3. MECHANICAL:
   3.1 ENGAGEMENT / DISENGAGEMENT FORCE: 2 IN-LBS. MAX
   3.2 COUPLING NUT RETENTION: 60 LBS. MIN
   3.3 COUPLING PROOF TORQUE: 15 IN-LBS. MIN
   3.4 CONTACT RETENTION: 6 LBS MIN
   3.5 DURABILITY: 500 CYCLES MIN

4. ENVIRONMENT:
   4.1 THERMAL SHOCK: MIL-STD-202, METHOD 107, CONDITION B.
   4.2 OPERATING TEMPERATURE: -55TO 125°C
   4.3 SALT SPRAY: MIL-STD-202, METHOD 101, CONDITION B
   4.4 SHOCK: MIL-STD-202, METHOD 213, CONDITION I
   4.5 VIBRATION: MIL-STD-202, METHOD 204, CONDITION D
   4.6 MOISTURE RESISTANCE: MIL-STD-202, METHOD 106

cinch connectivity solutions

This PROPRIETARY Document, Drawing or Specification is the Exclusive, Fully certified or Registered Property of Cinch and shall with the sole exception of Cinch, not be Copied or Used without Written Authorization from Cinch upon demand.

INTERPRET DRAWING IN ACCORDANCE WITH ASME Y14.5-2009

Model No. 134-1010-002			Johnson
RoHS2 ☑ 2011/65/EU	Cage Code		Title: ADAPTER ASSEMBLY,SMK(2.92mm) PLUG TO SMA JACK
UNLESS OTHERWISE SPECIFIED (DIETS, REF)	3RD ANGLE PROJECTION		Drawing No. 134-1010-002 — Rev. 001
.XXX ±.02 .XXXX ±.01 ANGLES ±5°	Drawn By: Betty.Yu		
	Date: 10/10/2017	Size C — DO NOT SCALE DRAWING	Workmanship Std NONE — Sheet 1 of 1