Chipsmall Limited consists of a professional team with an average of over 10 year of expertise in the distribution of electronic components. Based in Hongkong, we have already established firm and mutual-benefit business relationships with customers from,Europe,America and south Asia,supplying obsolete and hard-to-find components to meet their specific needs.

With the principle of “Quality Parts,Customers Priority,Honest Operation,and Considerate Service”,our business mainly focus on the distribution of electronic components. Line cards we deal with include Microchip,ALPS,ROHM,Xilinx,Pulse,ON,Everlight and Freescale. Main products comprise IC,Modules,Potentiometer,IC Socket,Relay,Connector.Our parts cover such applications as commercial,industrial, and automotives areas.

We are looking forward to setting up business relationship with you and hope to provide you with the best service and solution. Let us make a better world for our industry!

Contact us

Tel: +86-755-8981 8866 Fax: +86-755-8427 6832
Email & Skype: info@chipsmall.com Web: www.chipsmall.com
Address: A1208, Overseas Decoration Building, #122 Zhenhua RD., Futian, Shenzhen, China

THIS DRAWING IS UNPUBLISHED. RELEASED FOR PUBLICATION 20
© COPYRIGHT 20 BY - ALL RIGHTS RESERVED.

LOC	DIST
GP	00

REVISIONS

P	LTR	DESCRIPTION	DATE	DWN	APVD
	C2	REVISED PER ECO-12-008364	04MAY2012	KH	AS

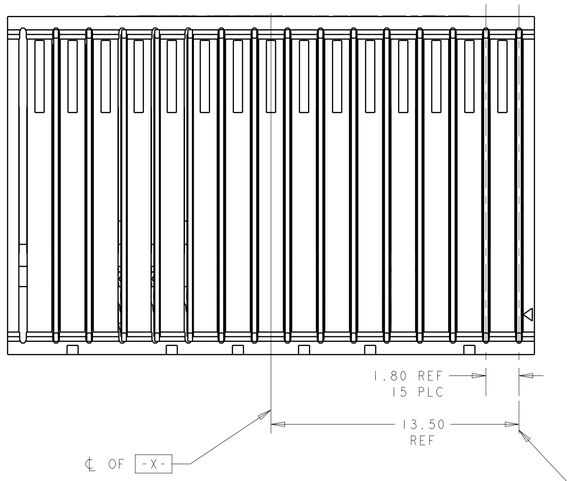

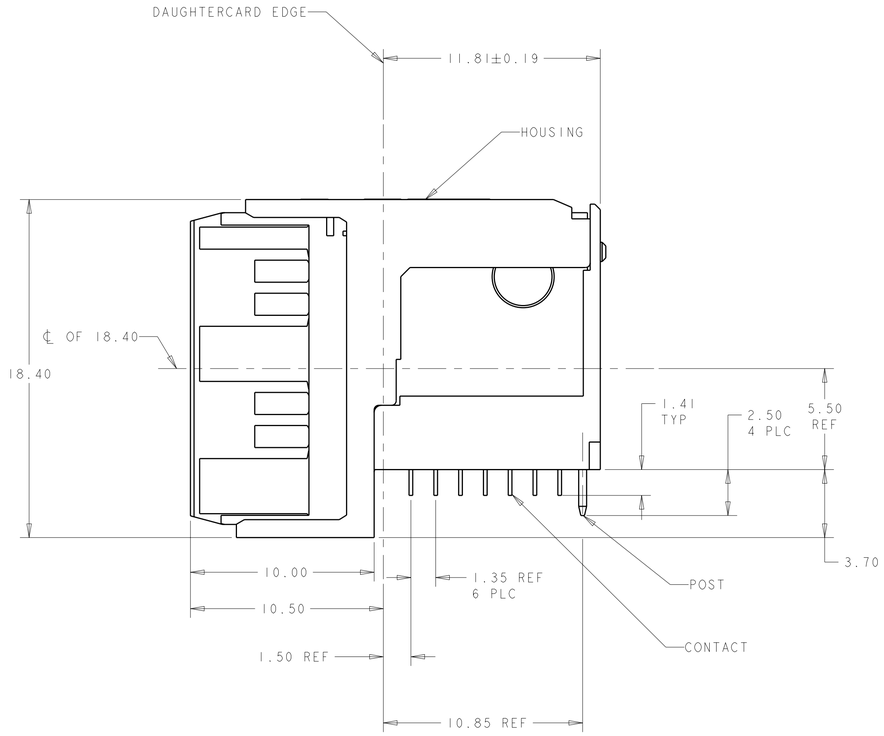

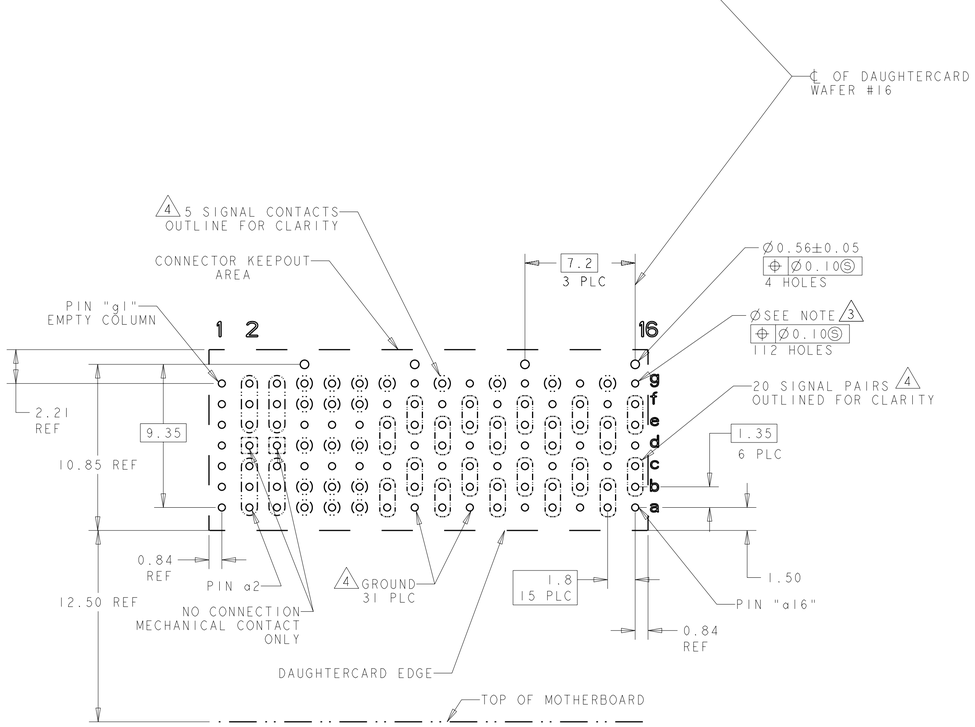

PC BOARD LAYOUT
(CONNECTOR SIDE)
SCALE 5:1

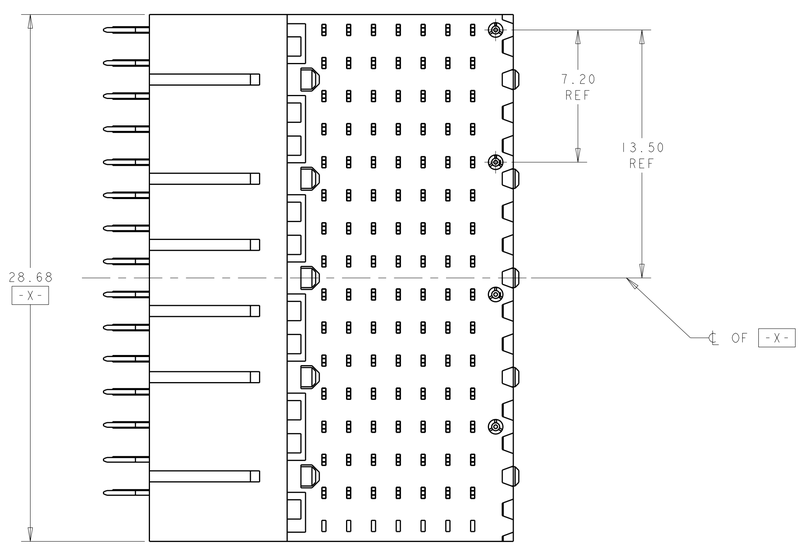

1 HOUSING: LCP, UL94V0, COLOR: BLACK.
CONTACT: PHOSPHOR BRONZE.
POST: BRASS WIRE

2 CONTACT: 1.27µm MIN GOLD IN PAD CONTACT AREA
1.27µm MIN TIN-LEAD ON PCB TAIL
OVER 1.27µm MIN NICKEL OVER ALL.
POST 1.27µm MIN NICKEL PLATED.

3 MANUFACTURING TOLERANCE FOR Ø0.46± 0.05
DIAMETER FINISHED HOLE WITH Sn /PB PLATING:

DRILLED HOLE = Ø0.55±0.02
COPPER PLATING = 0.025-0.050
Sn PB PLATING = 0.0038-0.0124

OR

MANUFACTURING TOLERANCE FOR Ø0.475± 0.05
DIAMETER FINISHED HOLE WITHOUT Sn /PB PLATING:

DRILLED HOLE = Ø0.55±0.02
COPPER PLATING = 0.025-0.050

4 SEE TABLE 1 FOR INTERCONNECTIONS TO
BACKPLANE CONNECTOR.

TABLE 1

INTERCONNECTIONS WITH BACKPLANE CONNECTOR — 1410964-1 OR 1410965-1

TYPICAL INTERCONNECTIONS FOR EACH COLUMN (WAFER): 2, 3		
CONTACT USAGE	DAUGHTERCARD CONNECTOR PIN	BACKPLANE CONNECTOR PIN
POWER	ax, bx, cx	ax, bx, cx, dx
POWER	ex, fx, gx	fx, gx, hx, ix
NOT CONNECTED	dx	ex

TYPICAL INTERCONNECTIONS FOR EACH COLUMN (WAFER): 4, 5, 6		
CONTACT USAGE	DAUGHTERCARD CONNECTOR PIN	BACKPLANE CONNECTOR PIN
SIGNAL	ax	bx
SIGNAL	bx	cx
SIGNAL	dx	ex
SIGNAL	fx	gx
SIGNAL	gx	hx
GROUNDS	cx, ex, (ALL COMMONED)	ax, dx, fx, ix

TYPICAL INTERCONNECTIONS FOR EACH ODD-NUMBERED COLUMN (WAFER): 7, 9, 11, 13, 15		
CONTACT USAGE	DAUGHTERCARD CONNECTOR PIN	BACKPLANE CONNECTOR PIN
SIGNAL PAIR	ax	ax
	bx	bx
SIGNAL PAIR	dx	ex
	ex	fx
SIGNAL	gx	ix
GROUNDS	cx, fx (ALL COMMONED)	cx, dx, gx, hx

TYPICAL INTERCONNECTIONS FOR EACH EVEN-NUMBERED COLUMN (WAFER): 8, 10, 12, 14, 16		
CONTACT USAGE	DAUGHTERCARD CONNECTOR PIN	BACKPLANE CONNECTOR PIN
SIGNAL PAIR	bx	cx
	cx	dx
SIGNAL PAIR	ex	gx
	fx	hx
GROUNDS	ax, dx, gx, (ALL COMMONED)	ax, bx, ex, fx, ix

NOTE: "x" DESIGNATES THE COLUMN NUMBER

5 CONTACT: 1.27µm MIN GOLD IN PAD CONTACT AREA
1.27µm MIN TIN ON PCB TAIL OVER 1.27µm MIN
NICKEL OVER ALL.
POST 1.27µm MIN NICKEL PLATED.

5	1410968-4
2	1410968-3
PLATING	PART NO

THIS DRAWING IS A CONTROLLED DOCUMENT.

DIMENSIONS: mm

TOLERANCES UNLESS OTHERWISE SPECIFIED:
0 PLC ±-
1 PLC ±0.5
2 PLC ±0.13
3 PLC ±-
4 PLC ±-
ANGLES ±1°0'

MATERIAL 1

FINISH SEE TABLE

DWN R TREA 17FEB2006
CHK G GRIFFITH 17FEB2006
APVD - 17FEB2006

PRODUCT SPEC 108-2072
APPLICATION SPEC 114-13056
WEIGHT -

TE Connectivity

NAME RIGHT-ANGLE PLUG ASSEMBLY, 7 ROW, CENTER, 20.3mm, MultiGig RT2, DAUGHTERCARD CONNECTOR, COMBO

SIZE A1 | CAGE CODE 00779 | DRAWING NO C-1410968 | RESTRICTED TO -

CUSTOMER DRAWING | SCALE 6:1 | SHEET 1 OF 1 | REV C2

4805 (3/11)

Pro/ENGINEER DRAWING