Chipsmall Limited consists of a professional team with an average of over 10 year of expertise in the distribution of electronic components. Based in Hongkong, we have already established firm and mutual-benefit business relationships with customers from,Europe,America and south Asia,supplying obsolete and hard-to-find components to meet their specific needs.

With the principle of “Quality Parts,Customers Priority,Honest Operation,and Considerate Service”,our business mainly focus on the distribution of electronic components. Line cards we deal with include Microchip,ALPS,ROHM,Xilinx,Pulse,ON,Everlight and Freescale. Main products comprise IC,Modules,Potentiometer,IC Socket,Relay,Connector.Our parts cover such applications as commercial,industrial, and automotives areas.

We are looking forward to setting up business relationship with you and hope to provide you with the best service and solution. Let us make a better world for our industry!

Contact us

Tel: +86-755-8981 8866 Fax: +86-755-8427 6832
Email & Skype: info@chipsmall.com Web: www.chipsmall.com
Address: A1208, Overseas Decoration Building, #122 Zhenhua RD., Futian, Shenzhen, China

THIS DRAWING IS UNPUBLISHED. RELEASED FOR PUBLICATION 20
© COPYRIGHT 20 BY TYCO ELECTRONICS CORPORATION. ALL RIGHTS RESERVED.

PART NUMBER	REV	TERMINATOR	FEED TYPE	DESCRIPTION
1426651-1	B	LEADMAKER	MECH POST FEED	CUTS CARRIER
1426651-2	B	BENCH	MECH PRE FEED	CUTS CARRIER
1426651-6	B	LEADMAKER	MECH POST FEED	CONTINUOUS CARRIER
7-1426651-1	B	LEADMAKER	MECH POST FEED	-1 AND SPARE PARTS
7-1426651-2	B	BENCH	MECH PRE FEED	-2 AND SPARE PARTS
7-1426651-6	B	LEADMAKER	MECH POST FEED	-6 AND SPARE PARTS
7-1426651-7	A	-	-	SPARE PARTS KIT

SET UP GAGE 458637-3

LOC	DIST
A	66

REVISIONS

P	LTR	DESCRIPTION	DATE	DWN	APVD
	A	SEE ECO-08-001334	17JAN2008	LJL	MC
	B	ECR-08-017999	17JUL2008	MY	TE

CRIMP DATA JST TERMINAL TE CRIMP SPECS (7)

TERMINAL NAME: PIN CONTACT, VL CONNECTOR

CRIMP	SIZE	TYPE	RANGE
WIRE	2.03 [.080 IN]	F	0.30-1.25mm² or 22-16 AWG (6)
INSUL	4.06 [.160 IN]	OV	1.70-3.20 [.067-.126 IN] (6)

WIRE STRIP LENGTH 4.80-5.60 [.189-.220 IN]

APPL INSTRUCTIONS 408-8322

TERMINAL APPL SPEC - - - -

FEED 14.00 [.551 IN]

TERMINALS APPLIED

TE TERM PN	MANUF TERM PN		
1949586-1	SVM-42T-P2.0	(5) -	-
1949587-1	SVF-42T-P2.0	(5) -	-
-	-	-	-
-	-	-	-

WIRE SIZE	CRIMP HEIGHT	PIN PN & LENGTH [IN]
1.00mm²	1.27 ±0.05 [.050 ±.002 IN]	2-354779-5 [.3115]
0.50mm²	1.12 ±0.05 [.044 ±.002 IN]	3-354779-8 [.3180]
0.35mm² (8)	1.07 ±0.05 [.042 ±.002 IN]	4-354779-2 [.3200]
-	-	
-	-	
-	-	
-	-	
-	-	
-	-	
-	-	
-	-	
-	-	

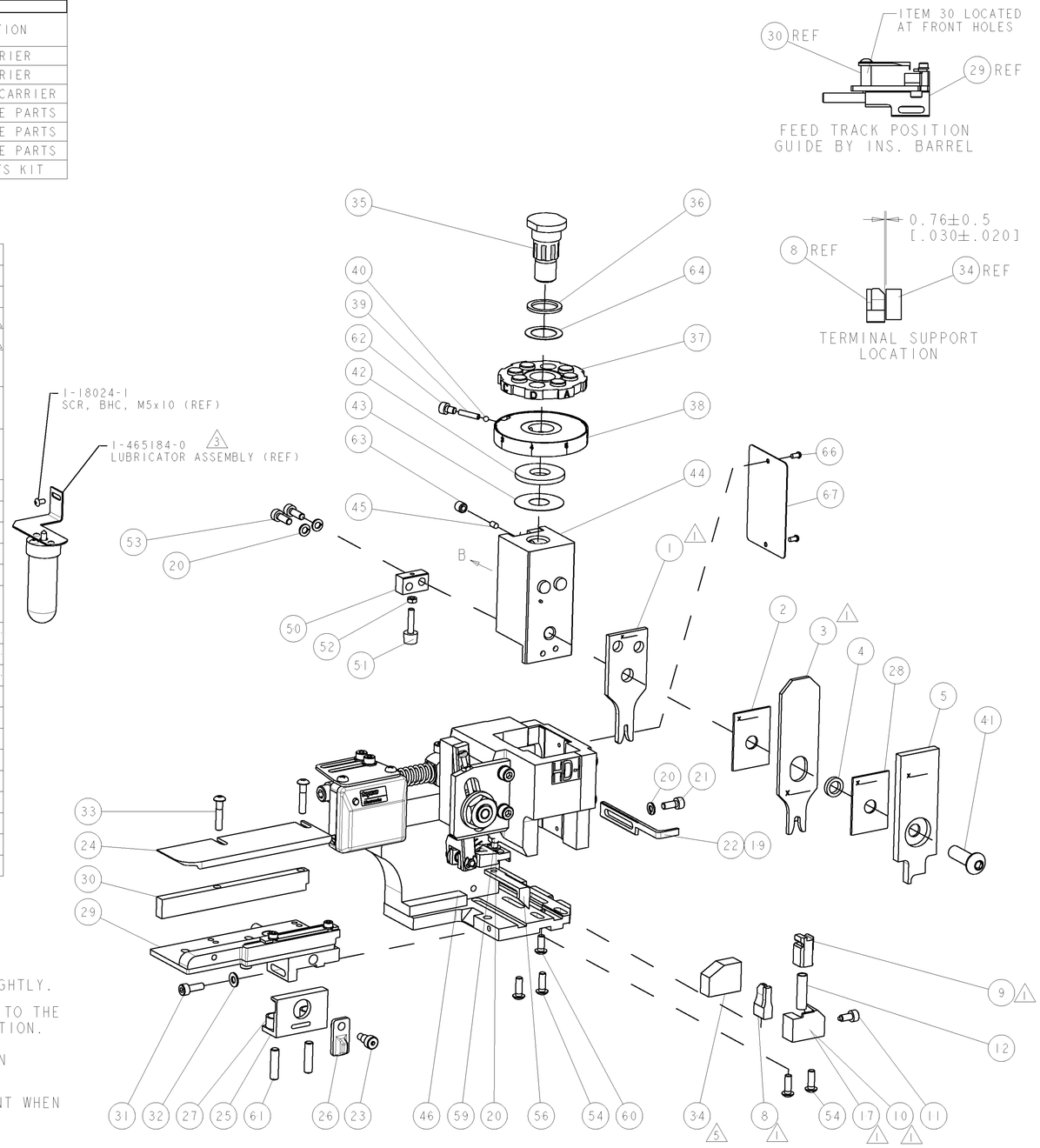

(1) RECOMMENDED SPARE PARTS.

2. GREASE RAM, CAM, CAM FOLLOWER AND FEED ROD LIGHTLY.

(3) CERTAIN TERMINALS REQUIRE LUBRICATION. REFER TO THE APPLICATOR INSTRUCTION SHEET FOR MORE INFORMATION.

4. LUBRICATE DAILY PER THE APPLICATOR INSTRUCTION SHEET SUPPLIED WITH THE APPLICATOR.

(5) TERMINAL SUPPORT ITEM 34 MAY REQUIRE ADJUSTMENT WHEN CHANGING BETWEEN PIN AND SOCKET.

(6) WIRE AND INSULATION RANGES SHOWN ARE THAT OF THE TERMINAL.

(7) ALL CRIMP DATA CALCULATED BY TYCO ELECTRONICS UK LTD.

(8) 0.35mm² WIRE SIZE NOT RECOMMENDED FOR USE BY TYCO ELECTRONICS UK LTD., BUT CAN BE USED AT CUSTOMERS DISCRETION.

VIEW B ROTATED 180°

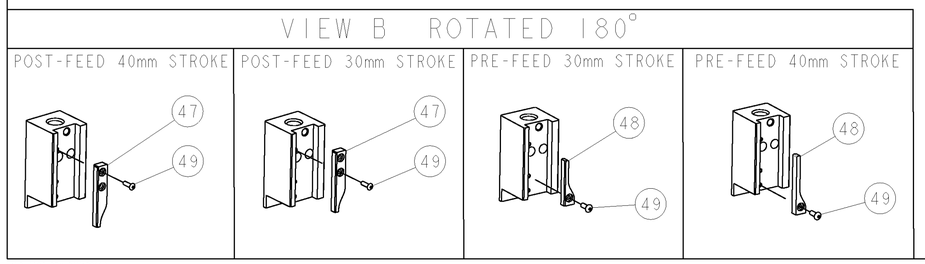

ITEM NO	DESCRIPTION	PART NO	-1	-2	-6	-71	-72	-76	-77
84	-	-	-	-	-	-	-	-	-
83	-	-	-	-	-	-	-	-	-
82	-	-	-	-	-	-	-	-	-
81	-	-	-	-	-	-	-	-	-
80	-	-	-	-	-	-	-	-	-
79	-	-	-	-	-	-	-	-	-
78	-	-	-	-	-	-	-	-	-
77	-	-	-	-	-	-	-	-	-
76	-	-	-	-	-	-	-	-	-
75	-	-	-	-	-	-	-	-	-
74	-	-	-	-	-	-	-	-	-

ITEM NO	DESCRIPTION	PART NO	-1	-2	-6	-71	-72	-76	-77
73	-	-	-	-	-	-	-	-	-
72	-	-	-	-	-	-	-	-	-
71	DOCUMENTATION PACKAGE	1338705-1	1	1	1	1	1	1	-
70	-	-	-	-	-	-	-	-	-
69	-	-	-	-	-	-	-	-	-
68	-	-	-	-	-	-	-	-	-
67	PLATE, IDENTIFICATION	461264-1	1	1	1	1	1	1	-
66	SCREW, DRIVE	21017-2	2	2	2	2	2	2	-
65	-	-	-	-	-	-	-	-	-
64	WASHER, FLAT PRECISION	986950-1	1	1	1	1	1	1	-
63	SCR, SET, CUP POINT M6 X 6.0	3-18031-0	1	1	1	1	1	1	-
62	SCR, SKT HD CAP M4 X 6.0	18023-9	1	1	1	1	1	1	-
61	SCR, SET, FLT POINT M5 X 20.0	2-18032-5	2	2	2	2	2	2	-
60	SCR, BTN SKT HD CAP (M4 X 10.0)	18024-7	1	1	1	1	1	1	-
59	SCR, HEX HD CAP M4 X 8.0	5-18022-2	1	1	1	1	1	1	-
58	-	-	-	-	-	-	-	-	-
57	-	-	-	-	-	-	-	-	-
56	PAWL, FEED	1338685-1	1	1	1	1	1	1	-
55	-	-	-	-	-	-	-	-	-
54	SCR, BTN SKT HD CAP (M4 X 12.0)	18024-8	4	4	4	4	4	4	-
53	SCR, SKT HD CAP M4 X 12.0	1-18023-2	2	2	2	2	2	2	-
52	NUT, HEX, REG M3	18030-1	1	1	1	1	1	1	-
51	BUMPER, HOLD DOWN	811242-5	1	1	1	1	1	1	-
50	SPACER, TONKER	690753-2	1	1	1	1	1	1	-
49	SCR, BTN SKT HD CAP (M3 X 10.0)	18024-3	1	1	1	1	1	1	-
48	CAM, UNIVERSAL PRE FEED	1338675-1	-	1	-	-	1	-	-
47	CAM, UNIVERSAL POST-FEED	1338676-1	1	-	1	1	-	1	-
46	APPLICATOR SUBASSEMBLY, HDI	1320999-3	1	1	1	1	1	1	-
45	PLUG,NYLON	690191-1	1	1	1	1	1	1	-
44	RAM	1338660-1	1	1	1	1	1	1	-
43	SHIM SUB-ASSY	690125-1	1	1	1	1	1	1	-
42	WASHER, RAM (.115)	690124-1	1	1	1	1	1	1	-
41	SCR, BTN SKT HD CAP (M8 X 25.0)	2-18024-6	1	1	1	1	1	1	-
40	BALL, STEEL	23241-1	1	1	1	1	1	1	-
39	SPRING, COMPRESSION	2-22278-7	1	1	1	1	1	1	-
38	DISC, ADJUST, INSULATION CRIMP	1-1320922-1	1	1	1	1	1	1	-
37	WIRE DISC, ASSEMBLY	354777-1	1	1	1	1	1	1	-
36	SPRING, COMPRESSION	22480-5	1	1	1	1	1	1	-
35	POST, RAM	690212-1	1	1	1	1	1	1	-
34	SUPPORT, TERMINAL	2-1320934-5	1	1	1	1	1	1	-
33	SCR, BTN SKT HD CAP (M4 X 20.0)	1-18024-0	2	2	2	2	2	2	-
32	WASHER, FLAT, REG M4	18027-2	1	1	1	1	1	1	-
31	SCR, SKT HD CAP M4 X 12.0	1-18023-2	1	1	1	1	1	1	-
30	SPACER, STRIP GUIDE	1320908-1	1	1	1	1	1	1	-
29	STRIP GUIDE ASSEMBLY	1633073-1	1	1	1	1	1	1	-
28	SPACER, CRIMPER	1-455888-0	1	1	1	1	1	1	-
27	SPRING, COMPRESSION	1-22284-0	2	2	2	2	2	2	-
26	LEVER, DRAG RELEASE	356835-1	1	1	1	1	1	1	-
25	DRAG, TERMINAL	240792-1	1	1	1	1	1	1	-
24	PLATE, STRIP GUIDE	1320928-1	1	1	1	1	1	1	-
23	SCR, SKT HD SHLDR 5.0 DIA X 6.0	980371-4	1	1	1	1	1	1	-
22	STRIPPER	690472-2	1	-	1	1	-	1	-
21	SCR, SKT HD CAP M4 X 10.0	1-18023-1	1	1	1	1	1	1	-
20	WASHER, SPRG LOCK, REG M4	18025-2	4	4	4	4	4	4	-
19	STRIPPER	690472-1	-	1	-	-	1	-	-
18	-	-	-	-	-	-	-	-	-
17	SHEAR HOLDER, FRONT	1338684-1	1	-	-	1	-	1	-
16	-	-	-	-	-	-	-	-	-
15	-	-	-	-	-	-	-	-	-
14	-	-	-	-	-	-	-	-	-
13	-	-	-	-	-	-	-	-	-
12	SPRING, COMPRESSION	3-22280-3	1	1	1	1	1	1	-
11	STOP, SHEAR	356885-4	1	1	1	1	1	1	-
10	SHEAR HOLDER, FRONT, CUT	1320921-1	1	1	-	1	1	-	-
9	FLOATING SHEAR, FRONT	454276-1	1	1	1	1	1	1	-
8	ANVIL, COMBINATION .080	5-1633131-0	1	2	2	1	1	2	1
7	-	-	-	-	-	-	-	-	-
6	-	-	-	-	-	-	-	-	-
5	DEPRESSOR, SHEAR	1-455889-4	1	1	1	1	1	1	-
4	BLOCK, CRIMPER SPACER	238011-4	1	1	1	1	1	1	-
3	CRIMPER, INSULATION OVERLAP	318903-5	1	2	2	2	1	1	1
2	SPACER, CRIMPER	1-455888-1	1	1	1	1	1	1	-
1	CRIMPER, WIRE PREMIUM	2-456405-4	1	2	2	1	1	2	1
ITEM NO	DESCRIPTION	PART NO	-1	-2	-6	-71	-72	-76	-77

THIS DRAWING IS A CONTROLLED DOCUMENT FOR TYCO ELECTRONICS CORPORATION. IT IS SUBJECT TO CHANGE AND THE CONTROLLING ENGINEERING ORGANIZATION SHOULD BE CONTACTED FOR THE LATEST REVISION.

DIMENSIONS: mm [IN]

TOLERANCES UNLESS OTHERWISE SPECIFIED:
0 PLC ±-
1 PLC ±-
2 PLC ±-
3 PLC ±-
4 PLC ±-
ANGLES ±-

MATERIAL - -

FINISH - -

DWN L LOFTHOUSE 04DEC2007
CHK -
APVD M.CLIFFORD 04DEC2007
PRODUCT SPEC -
APPLICATION SPEC See Table
WEIGHT -

Tyco Electronics
Tyco Electronics
Harrisburg, PA 17105-3608

NAME SIDE FEED HDI APPLICATOR

SIZE	CAGE CODE	DRAWING NO	RESTRICTED TO
A1	00779	C-1426651	-

CUSTOMER DRAWING SCALE 3:5 SHEET 1 OF 1 REV B

AMP 4805 REV 31MAR2000

Pro/ENGINEER DRAWING