Chipsmall Limited consists of a professional team with an average of over 10 year of expertise in the distribution of electronic components. Based in Hongkong, we have already established firm and mutual-benefit business relationships with customers from,Europe,America and south Asia,supplying obsolete and hard-to-find components to meet their specific needs.

With the principle of “Quality Parts,Customers Priority,Honest Operation,and Considerate Service”,our business mainly focus on the distribution of electronic components. Line cards we deal with include Microchip,ALPS,ROHM,Xilinx,Pulse,ON,Everlight and Freescale. Main products comprise IC,Modules,Potentiometer,IC Socket,Relay,Connector.Our parts cover such applications as commercial,industrial, and automotives areas.

We are looking forward to setting up business relationship with you and hope to provide you with the best service and solution. Let us make a better world for our industry!

Contact us

Tel: +86-755-8981 8866 Fax: +86-755-8427 6832
Email & Skype: info@chipsmall.com Web: www.chipsmall.com
Address: A1208, Overseas Decoration Building, #122 Zhenhua RD., Futian, Shenzhen, China

REVISIONS					
	C1	ECO-0077-03	01-Oct-03	JG	JG
	D	ECO-0110-03	06-Nov-03	JG	JG
	E	ECO-0048-04	23-Mar-04	JG	JG

⚠ CABLE ASSEMBLY SHALL BE WIRED PER WIRING DIAGRAM.

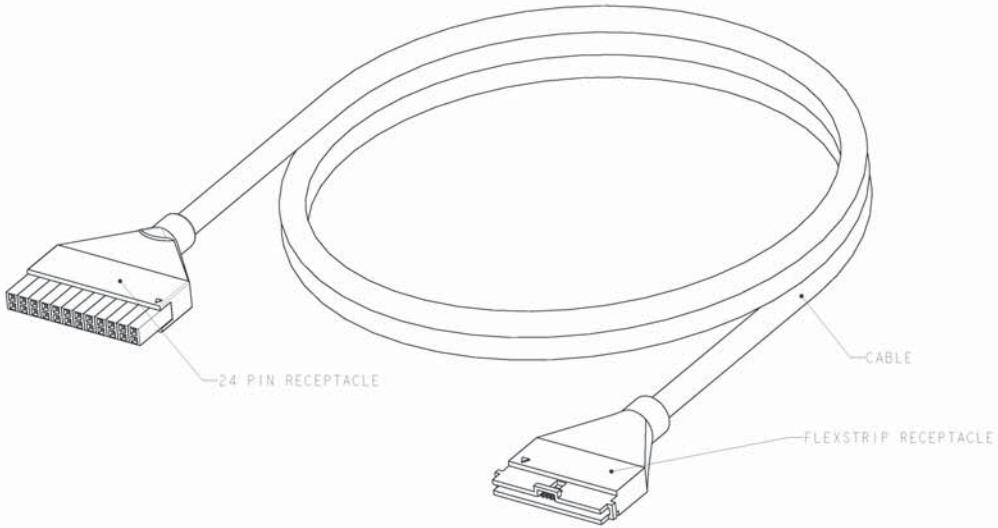

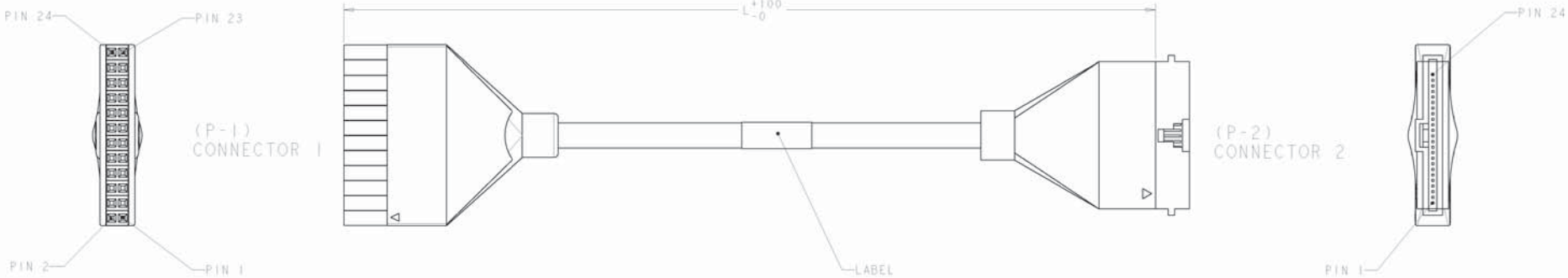

WIRING DIAGRAM ⚠

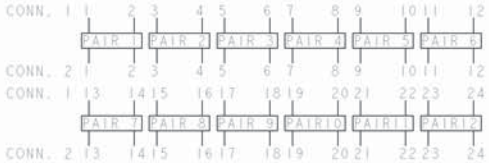

METER	L	PART NO.
15	15000.00 [590.55]	1-1435334-5
10	10000.00 [393.70]	1-1435334-0
5	5000.0 [196.85]	1435334-5
4	4000.0 [157.48]	1435334-4
3	3000.0 [118.11]	1435334-3
2	2000.0 [78.74]	1435334-2
1	1000.0 [39.37]	143534-1

DRAWN: J. PITTS 22JUL02
CHK: L. SMITH 22JUL02
APPD: P. BERE 22JUL02

tyco Electronics — Tyco Electronics AMP España S.A. Barcelona, Spain

NAME: AMPTRAC I/O CABLE TO FLEXSTRIP LSZH

DIMENSIONS: MM [INCHES]
TOLERANCES UNLESS OTHERWISE SPECIFIED: 0 PLC ±- 1 PLC ±- 2 PLC ±- 3 PLC ±- 4 PLC ±-
PRODUCT SPEC -
APPLICATION SPEC -
WEIGHT -
MATERIAL -
FINISH -

SIZE A1 | CAGE CODE 00779 | DRAWING NO C-1435334 | RESTRICTED TO -

CUSTOMER DRAWING | SCALE NTS | SHEET 1 OF 1 | REV E

Pro/ENGINEER DRAWING