Chipsmall Limited consists of a professional team with an average of over 10 year of expertise in the distribution of electronic components. Based in Hongkong, we have already established firm and mutual-benefit business relationships with customers from,Europe,America and south Asia,supplying obsolete and hard-to-find components to meet their specific needs.

With the principle of “Quality Parts,Customers Priority,Honest Operation,and Considerate Service”,our business mainly focus on the distribution of electronic components. Line cards we deal with include Microchip,ALPS,ROHM,Xilinx,Pulse,ON,Everlight and Freescale. Main products comprise IC,Modules,Potentiometer,IC Socket,Relay,Connector.Our parts cover such applications as commercial,industrial, and automotives areas.

We are looking forward to setting up business relationship with you and hope to provide you with the best service and solution. Let us make a better world for our industry!

Contact us

Tel: +86-755-8981 8866 Fax: +86-755-8427 6832
Email & Skype: info@chipsmall.com Web: www.chipsmall.com
Address: A1208, Overseas Decoration Building, #122 Zhenhua RD., Futian, Shenzhen, China

THIS DRAWING IS UNPUBLISHED. RELEASED FOR PUBLICATION - ,- .
© COPYRIGHT - By - ALL RIGHTS RESERVED.

LOC	DIST
AD	00

REVISIONS

P	LTR	DESCRIPTION	DATE	DWN	APVD
	L5	REVISED PER ECO-13-005565	28MAR13	KH	JO

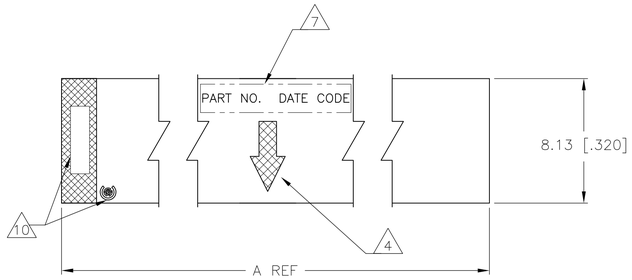

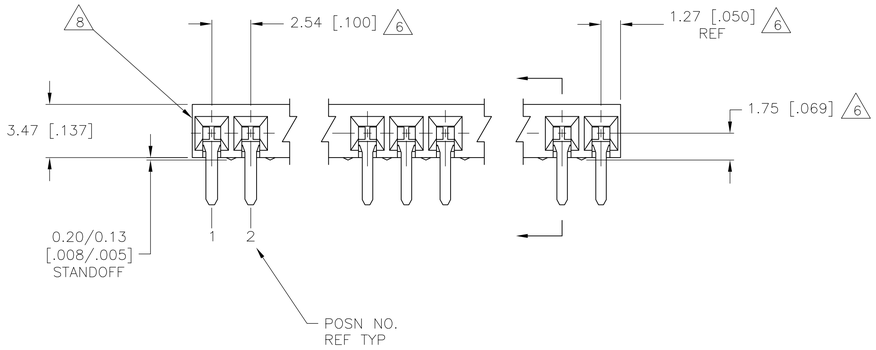

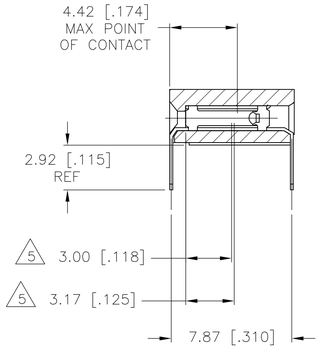

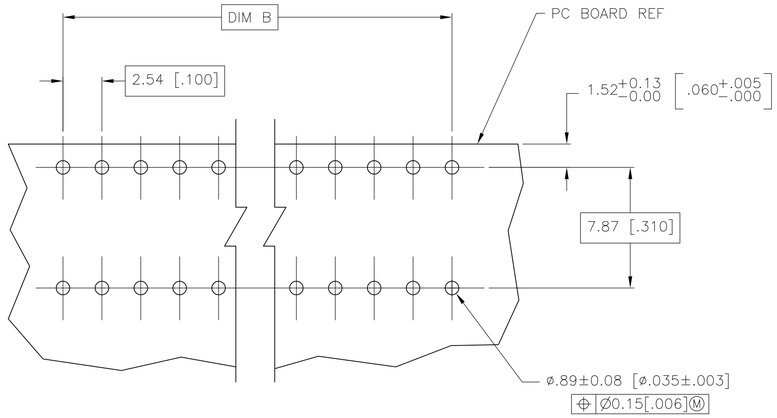

RECOMMENDED PC BOARD LAYOUT

1. HOUSING MATERIAL: GLASS FILLED POLYESTER, COLOR- BLACK
2. CONTACT MATERIAL: PHOSPHOR BRONZE
3. CONTACT FINISH: 0.00025[.000010] THK DUPLEX PLATED GOLD ON CONTACT AREA, 0.00127[.000050] MIN THK BRIGHT TIN-LEAD ON SOLDERLEADS, ALL OVER 0.00127[.000050] NICKEL
4. MOLDED IN ARROW DESIGNATES THE MATING FACE OF THE CONNECTOR
5. POINT OF MEASUREMENT FOR PLATING THICKNESS OF CONTACT AREA
6. DIMENSIONS PERTAIN TO HOUSING CAVITY CENTERLINES
7. MARK PART NUMBER AND DATE CODE IN APPROXIMATE LOCATION SHOWN, EITHER END.
8. ALTERNATE LOCATION FOR DATE CODE FOR 2 AND 3 POSITION.
9. NO PART NUMBER MARKING REQUIRED FOR THIS PART.
10. TE LOGO AND CSA LOGO ARE MOLDED INTO HOUSING, THIS LOCATION.

B	A	NO. OF POSN	ASSEMBLY PART NUMBER
162.56[6.400]	165.10[6.500]	65	6-146139-4
160.02[6.300]	162.56[6.400]	64	6-146139-3
157.48[6.200]	160.02[6.300]	63	6-146139-2
154.94[6.100]	157.48[6.200]	62	6-146139-1
152.40[6.000]	154.94[6.100]	61	6-146139-0
149.86[5.900]	152.40[6.000]	60	5-146139-9
147.32[5.800]	149.86[5.900]	59	5-146139-8
144.78[5.700]	147.32[5.800]	58	5-146139-7
142.24[5.600]	144.78[5.700]	57	5-146139-6
139.70[5.500]	142.24[5.600]	56	5-146139-5
137.16[5.400]	139.70[5.500]	55	5-146139-4
134.62[5.300]	137.16[5.400]	54	5-146139-3
132.08[5.200]	134.62[5.300]	53	5-146139-2
129.54[5.100]	132.08[5.200]	52	5-146139-1
127.00[5.000]	129.54[5.100]	51	5-146139-0
124.46[4.900]	127.00[5.000]	50	4-146139-9
121.92[4.800]	124.46[4.900]	49	4-146139-8
119.38[4.700]	121.92[4.800]	48	4-146139-7
116.84[4.600]	119.38[4.700]	47	4-146139-6
114.30[4.500]	116.84[4.600]	46	4-146139-5
111.76[4.400]	114.30[4.500]	45	4-146139-4
109.22[4.300]	111.76[4.400]	44	4-146139-3
106.68[4.200]	109.22[4.300]	43	4-146139-2
104.14[4.100]	106.68[4.200]	42	4-146139-1
101.16[4.000]	104.14[4.100]	41	4-146139-0
99.06[3.900]	101.16[4.000]	40	3-146139-9
96.52[3.800]	99.06[3.900]	39	3-146139-8
93.98[3.700]	96.52[3.800]	38	3-146139-7
91.44[3.600]	93.98[3.700]	37	3-146139-6
88.90[3.500]	91.44[3.600]	36	3-146139-5
86.36[3.400]	88.90[3.500]	35	3-146139-4
83.82[3.300]	86.36[3.400]	34	3-146139-3
81.28[3.200]	83.82[3.300]	33	3-146139-2
78.74[3.100]	81.28[3.200]	32	3-146139-1
76.20[3.000]	78.74[3.100]	31	3-146139-0
73.66[2.900]	76.20[3.000]	30	2-146139-9
71.12[2.800]	73.66[2.900]	29	2-146139-8
68.58[2.700]	71.12[2.800]	28	2-146139-7
66.04[2.600]	68.58[2.700]	27	2-146139-6
63.50[2.500]	66.04[2.600]	26	2-146139-5
60.96[2.400]	63.50[2.500]	25	2-146139-4
58.42[2.300]	60.96[2.400]	24	2-146139-3
55.88[2.200]	58.42[2.300]	23	2-146139-2
53.34[2.100]	55.88[2.200]	22	2-146139-1
50.80[2.000]	53.34[2.100]	21	2-146139-0
48.26[1.900]	50.80[2.000]	20	1-146139-9
45.72[1.800]	48.26[1.900]	19	1-146139-8
43.18[1.700]	45.72[1.800]	18	1-146139-7
40.64[1.600]	43.18[1.700]	17	1-146139-6
38.10[1.500]	40.64[1.600]	16	1-146139-5
35.56[1.400]	38.10[1.500]	15	1-146139-4
33.02[1.300]	35.56[1.400]	14	1-146139-3
30.48[1.200]	33.02[1.300]	13	1-146139-2
27.94[1.100]	30.48[1.200]	12	1-146139-1
25.40[1.000]	27.94[1.100]	11	1-146139-0
20.32[.800]	25.40[1.000]	10	146139-9
17.78[.700]	22.86[.900]	9	146139-8
17.78[.700]	20.32[.800]	8	146139-7
15.24[.600]	17.78[.700]	7	146139-6
12.70[.500]	15.24[.600]	6	146139-5
9 10.16[.400]	12.70[.500]	5	146139-4
9 7.62[.300]	10.16[.400]	4	146139-3
9 9 5.08[.200]	7.62[.300]	3	8 146139-2
9 2.54[.100]	5.08[.200]	2	8 146139-1

THIS DRAWING IS A CONTROLLED DOCUMENT.

DIMENSIONS: mm

TOLERANCES UNLESS OTHERWISE SPECIFIED:
0 PLC ± -
1 PLC ± -
2 PLC ± -
3 PLC ± 0.13[.005]
4 PLC ± -
ANGLES ± -

MATERIAL 1 2
FINISH 3

DWN R BROWN 03JUN02
CHK J OLSON 03JUN02
APVD J OLSON 03JUN02
PRODUCT SPEC —
APPLICATION SPEC —
WEIGHT —
CUSTOMER DRAWING

TE Connectivity

NAME AMPMODU MOD II RECEPTACLE ASSEMBLY, HORIZONTAL, .100 CL, SINGLE ROW, CLOSED-ENTRY, SHORT POINT OF CONTACT, END-TO-END STACKABLE

SIZE	CAGE CODE	DRAWING NO	RESTRICTED TO
A1	00779	C-146139	—

SCALE 5:1 SHEET 1 OF 1 REV L5

4805 (3/11)