Chipsmall Limited consists of a professional team with an average of over 10 year of expertise in the distribution of electronic components. Based in Hongkong, we have already established firm and mutual-benefit business relationships with customers from,Europe,America and south Asia,supplying obsolete and hard-to-find components to meet their specific needs.

With the principle of “Quality Parts,Customers Priority,Honest Operation,and Considerate Service”,our business mainly focus on the distribution of electronic components. Line cards we deal with include Microchip,ALPS,ROHM,Xilinx,Pulse,ON,Everlight and Freescale. Main products comprise IC,Modules,Potentiometer,IC Socket,Relay,Connector.Our parts cover such applications as commercial,industrial, and automotives areas.

We are looking forward to setting up business relationship with you and hope to provide you with the best service and solution. Let us make a better world for our industry!

Contact us

Tel: +86-755-8981 8866 Fax: +86-755-8427 6832
Email & Skype: info@chipsmall.com Web: www.chipsmall.com
Address: A1208, Overseas Decoration Building, #122 Zhenhua RD., Futian, Shenzhen, China

THIS DRAWING IS UNPUBLISHED. RELEASED FOR PUBLICATION -,- .
© COPYRIGHT 2011 BY TYCO ELECTRONICS CORPORATION. ALL RIGHTS RESERVED.

LOC	DIST
DW	—

REVISIONS

P	LTR	DESCRIPTION	DATE	DWN	APVD
	H	REVISED (ECR-13-000307)	20MAY'13	E.L.	W.K.

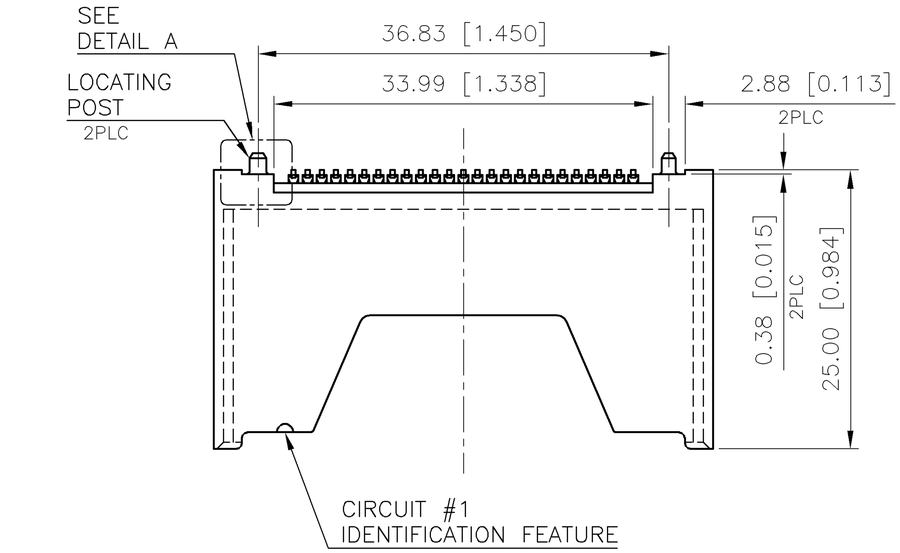

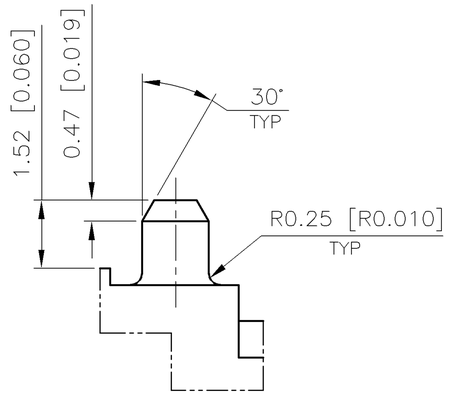

DETAIL A
SCALE 4:1

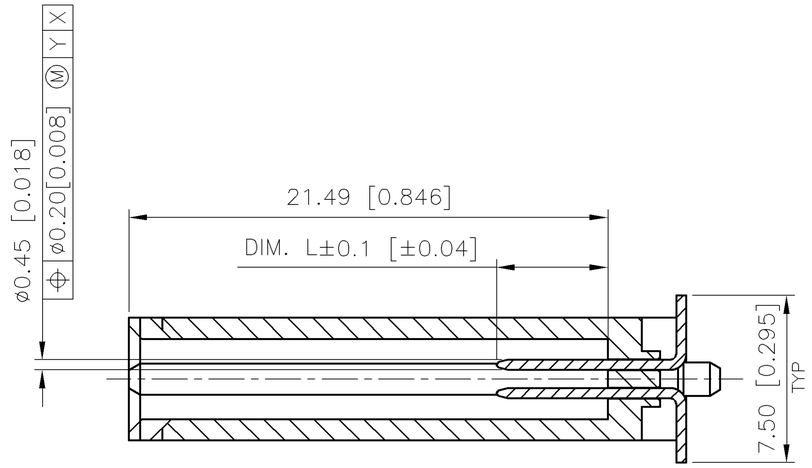

B–B
SCALE 2:1

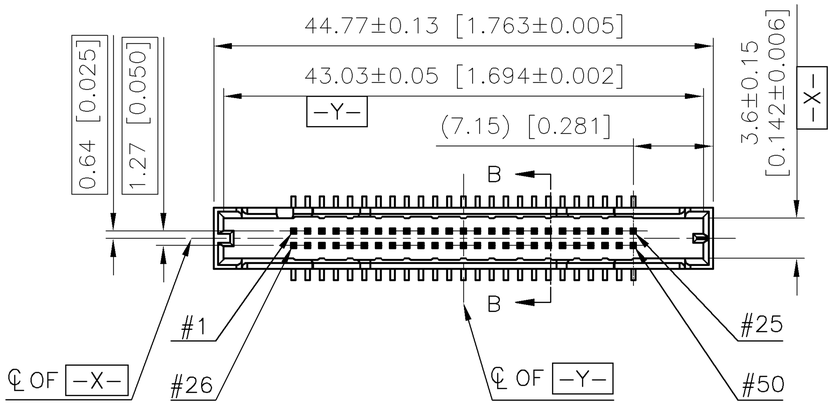

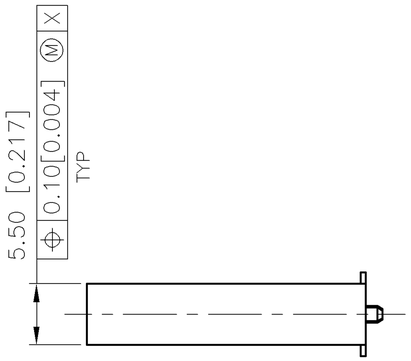

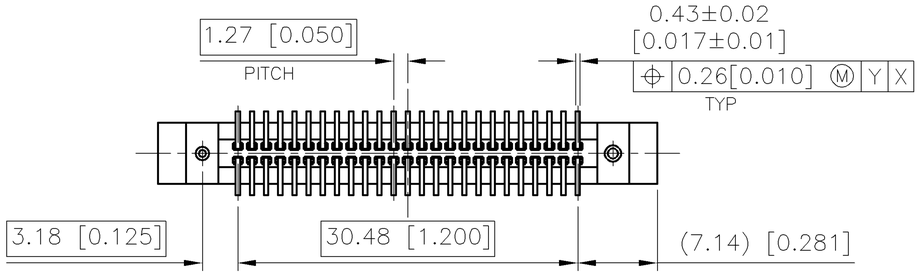

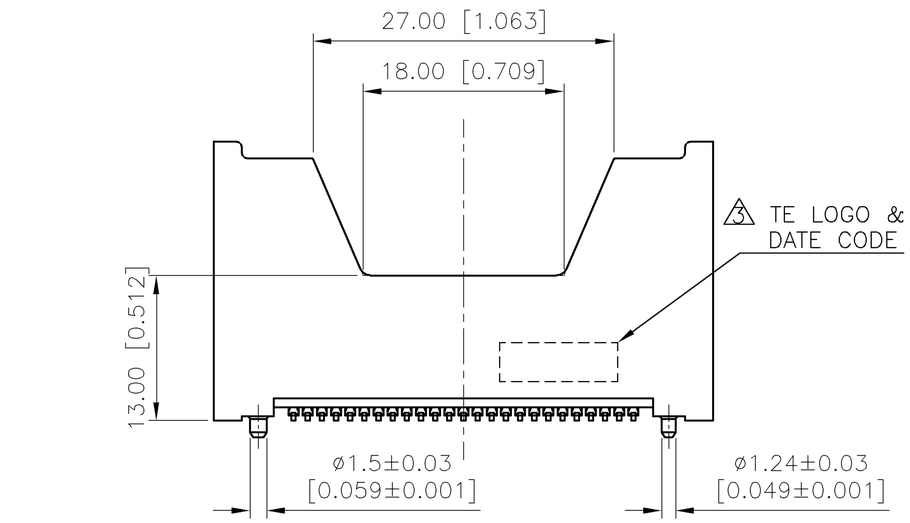

SUPERSEDE 146540-1 WITH 146540-2					
	B	ACTIVE	1, 13 38, 50	ALL OTHER PINS	25, 26	146540-2
	A					146540-1
FINISH	PART STATUS	5.00 [0.197]	4.25 [0.167]	3.50 [0.138]	ASSEMBLY PATR NUMBER
		"L"PIN LENGTH & CAVITY LOCAION			

THIS DRAWING IS A CONTROLLED DOCUMENT.

DIMENSIONS: mm

TOLERANCES UNLESS OTHERWISE SPECIFIED:

0 PLC	± –
1 PLC	± 0.3
2 PLC	± 0.2
3 PLC	± 0.15
4 PLC	± –
ANGLES	± 3°

MATERIAL: SEE NOTE

FINISH: SEE NOTE

DWN J. BURWELL 27JUN1996
CHK K. KREIDLER 18AUG2003
APVD —
PRODUCT SPEC 108-57134
APPLICATION SPEC —
WEIGHT 3.79 GRAMS

TE Connectivity

NAME
PIN HEADER ASSEMBLY
VERTICAL, 50 POS, SURFACE MOUNT
AMP COMPACT FLASH

SIZE	CAGE CODE	DRAWING NO	RESTRICTED TO
A3	00779	C-146540	—

CUSTOMER DRAWING | SCALE — | SHEET 1 OF 3 | REV H

THIS DRAWING IS UNPUBLISHED. RELEASED FOR PUBLICATION -,- .
© COPYRIGHT 2011 BY TYCO ELECTRONICS CORPORATION. ALL RIGHTS RESERVED.

LOC	DIST
DW	—

REVISIONS

P	LTR	DESCRIPTION	DATE	DWN	APVD
		SEE SHEET 1.			

NOTE:

1. MATERIAL:
   HOUSING: LCP WITH 30% GF, UL 94 V-0, BLACK COLOR.
   CONTACTS: BRASS.
2. FINISH:
   CONTACTS: (A) 0.381um [15u"] MIN. GOLD PLATED ON CONTACT AREA.
   3.81um [150u"] MIN. TIN-LEAD ON SOLDER TAIL.
   1.27um [50u"] MIN. NICKEL UNDERPLATED OVERALL.
   (B) 0.381um [15u"] MIN GOLD ON CONTACT AREA.
   OR 0.0508um [2u"] MIN GOLD OVER 0.254um [10u"]
   PALLADIUM NICKEL ON CONTACT AREA.
   3.81um [150u"] MIN 100% MATTE-TIN ON SOLDER TAILS.
   1.27um [50u"] MIN NICKEL UNDERPLATED OVERALL.
3. COPMANY LOGO IN APPROXIMATE AREA SHOWN.
4. REFLOW SOLDER CAPABLE TO 260°C PER TE TEST SPEC. 109-201, CONDITION B.
5. DAUMS AND BASIC DIMENSIONS ESTABLISHED BY CUSTOMER.

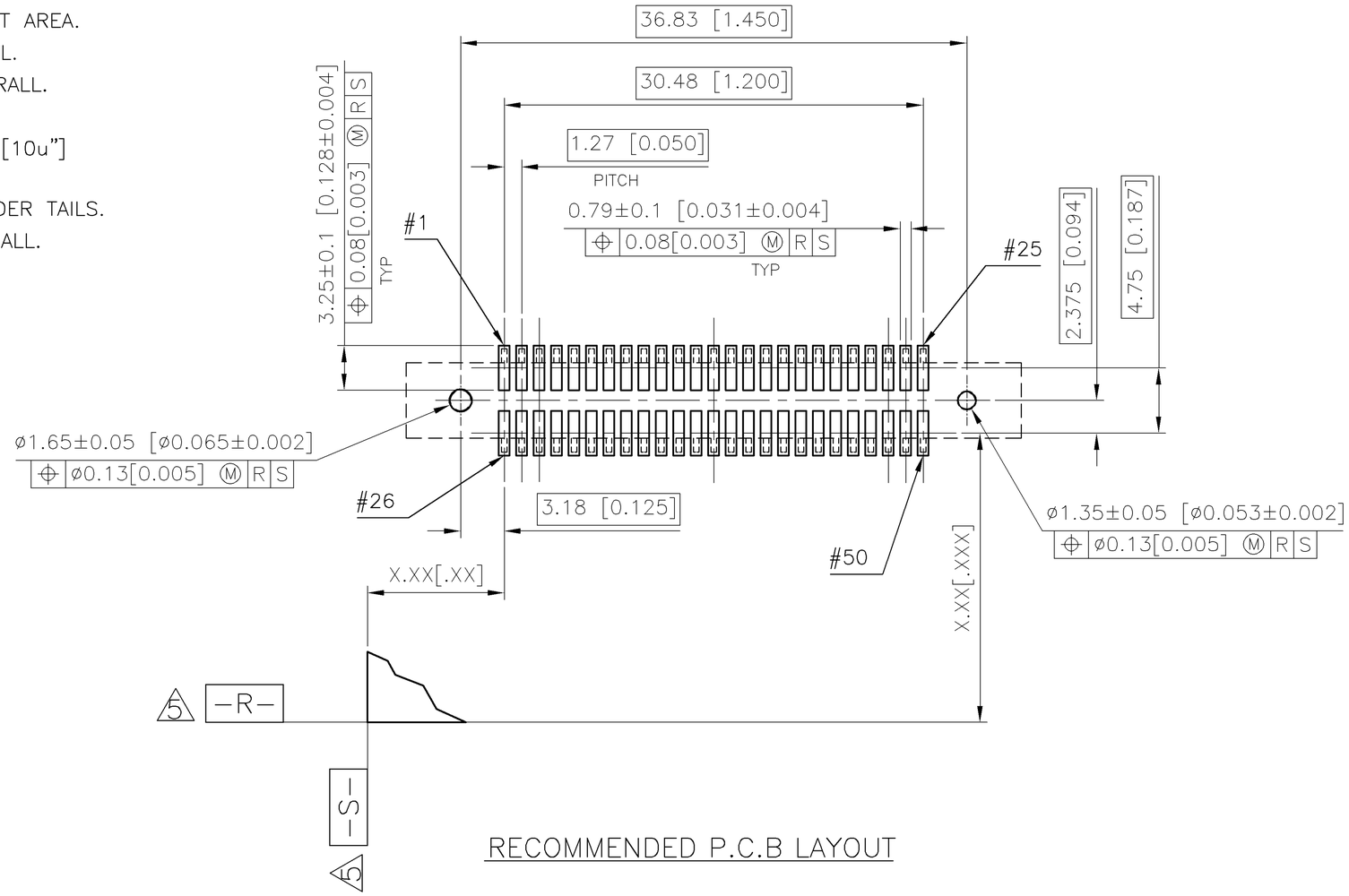

RECOMMENDED P.C.B LAYOUT

THIS DRAWING IS A CONTROLLED DOCUMENT.

DIMENSIONS: mm

TOLERANCES UNLESS OTHERWISE SPECIFIED:

0 PLC	± –
1 PLC	± 0.3
2 PLC	± 0.2
3 PLC	± 0.15
4 PLC	± –
ANGLES	± 3°

MATERIAL –

FINISH –

DWN –
CHK –
APVD –
PRODUCT SPEC –
APPLICATION SPEC –
WEIGHT –

CUSTOMER DRAWING

TE Connectivity

NAME
PIN HEADER ASSEMBLY
VERTICAL, 50 POS, SURFACE MOUNT
AMP COMPACT FLASH

SIZE	CAGE CODE	DRAWING NO	RESTRICTED TO
A3	00779	C-146540	—

SCALE — SHEET 2 OF 3 REV H

THIS DRAWING IS UNPUBLISHED. RELEASED FOR PUBLICATION -,- .
© COPYRIGHT 2011 BY TYCO ELECTRONICS CORPORATION. ALL RIGHTS RESERVED.

LOC	DIST
DW	—

REVISIONS

P	LTR	DESCRIPTION	DATE	DWN	APVD
		SEE SHEET 1.			

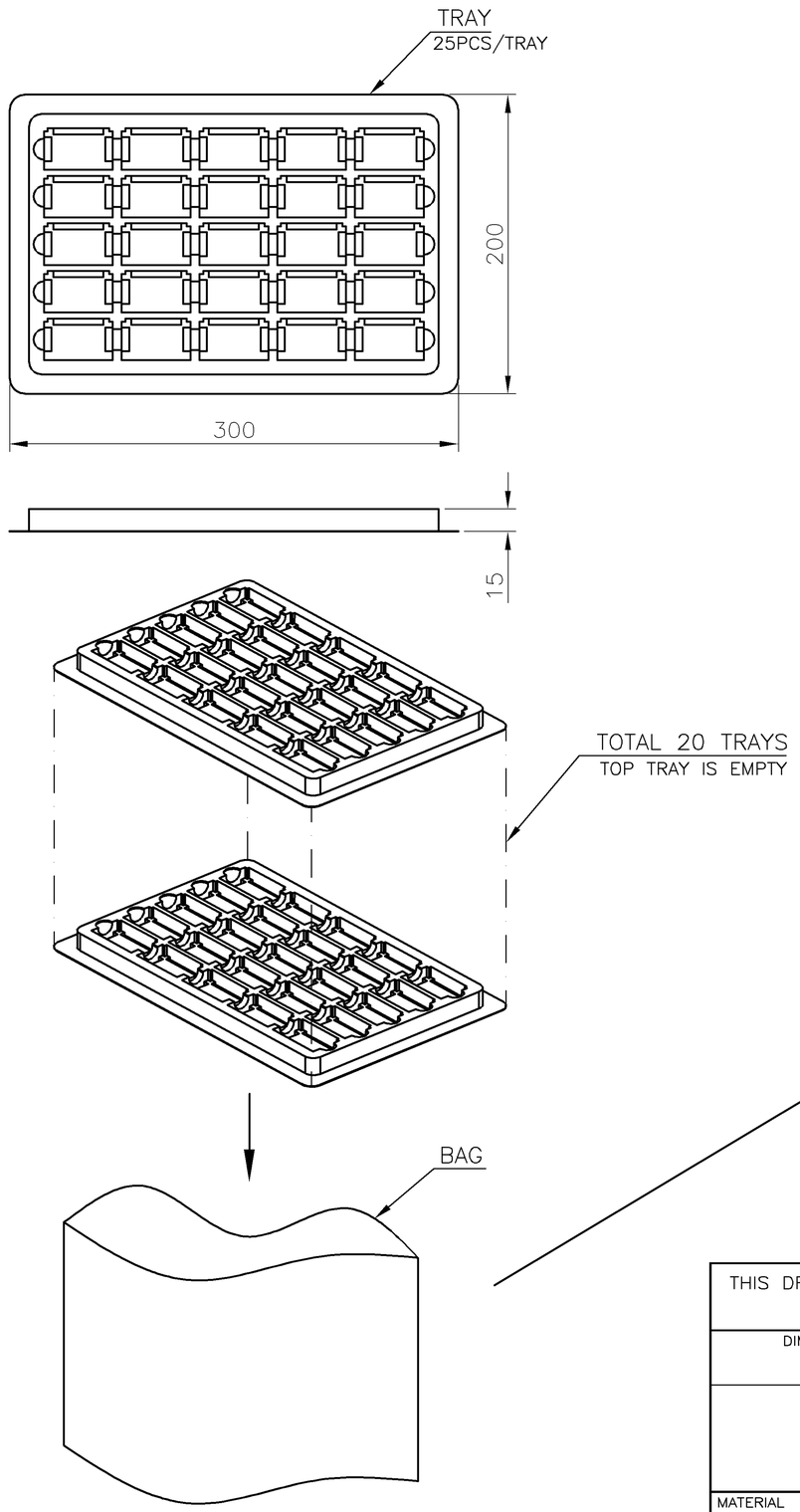

NOTES:

1. MATERIAL:
   TRAY: PS
   BAG: PE
   BOX: CORRUGATED FIBERBOARD.
2. DIMENSION:
   TRAY: L=300mm, W=200mm, H=15mm
   BAG: L=600mm, W=600mm, THICKNESS=0.1mm
   BOX: L=310mm, W=210mm, H=310mm
3. EACH BAG SHALL BE INCLUDED:
   * DESICCANT
3. QUANTITY: SEE TABLE
4. WEIGHT: SEE TABLE

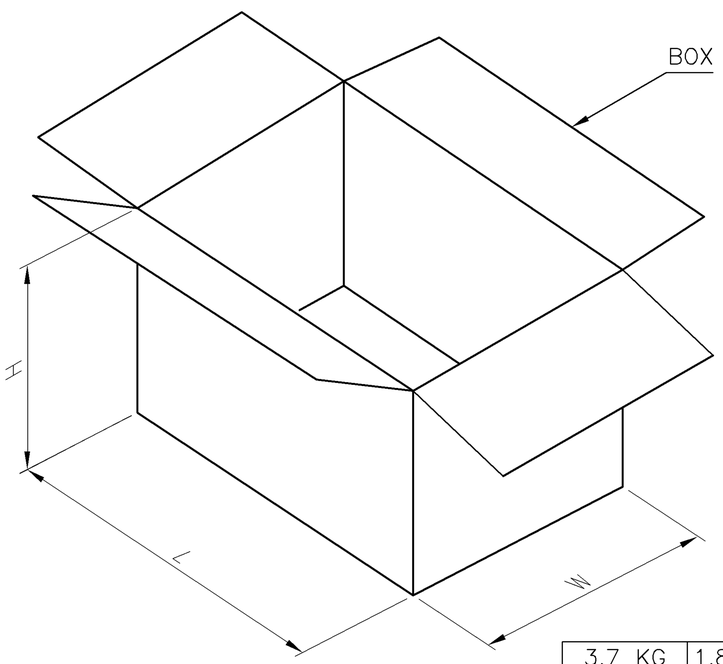

3.7 KG	1.89 KG	25	20	500
GROSS WEIGHT	NET WEIGHT	PCS/ TRAY	TRAY/ BOX	PCS/ BOX

THIS DRAWING IS A CONTROLLED DOCUMENT.

DIMENSIONS: mm

TOLERANCES UNLESS OTHERWISE SPECIFIED:

0 PLC	± –
1 PLC	± 0.3
2 PLC	± 0.2
3 PLC	± 0.15
4 PLC	± –
ANGLES	± 3°

MATERIAL: –

FINISH: –

DWN: –
CHK: –
APVD: –
PRODUCT SPEC: —
APPLICATION SPEC: —
WEIGHT: —

TE Connectivity

NAME: PIN HEADER ASSEMBLY VERTICAL, 50 POS, SURFACE MOUNT AMP COMPACT FLASH

SIZE	CAGE CODE	DRAWING NO	RESTRICTED TO
A3	00779	C-146540	—

CUSTOMER DRAWING | SCALE: — | SHEET 3 OF 3 | REV H