Chipsmall Limited consists of a professional team with an average of over 10 year of expertise in the distribution of electronic components. Based in Hongkong, we have already established firm and mutual-benefit business relationships with customers from,Europe,America and south Asia,supplying obsolete and hard-to-find components to meet their specific needs.

With the principle of “Quality Parts,Customers Priority,Honest Operation,and Considerate Service”,our business mainly focus on the distribution of electronic components. Line cards we deal with include Microchip,ALPS,ROHM,Xilinx,Pulse,ON,Everlight and Freescale. Main products comprise IC,Modules,Potentiometer,IC Socket,Relay,Connector.Our parts cover such applications as commercial,industrial, and automotives areas.

We are looking forward to setting up business relationship with you and hope to provide you with the best service and solution. Let us make a better world for our industry!

Contact us

Tel: +86-755-8981 8866 Fax: +86-755-8427 6832
Email & Skype: info@chipsmall.com Web: www.chipsmall.com
Address: A1208, Overseas Decoration Building, #122 Zhenhua RD., Futian, Shenzhen, China

MODEL NO.	PACKAGING
147-0801-201	ONE PCS PER BAG

REV	ECO	DATE
001	ECO-17-0032	11/28/2017

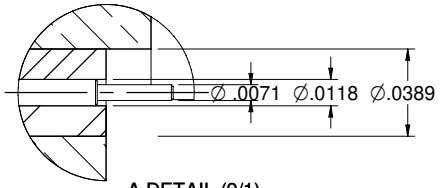

A DETAIL (9/1)

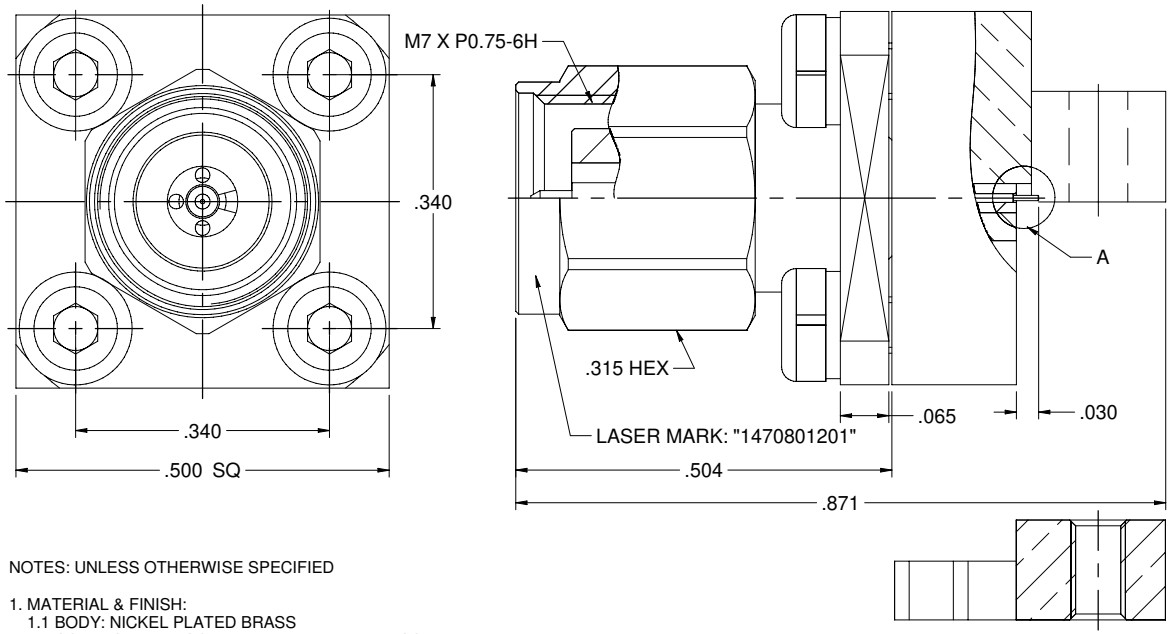

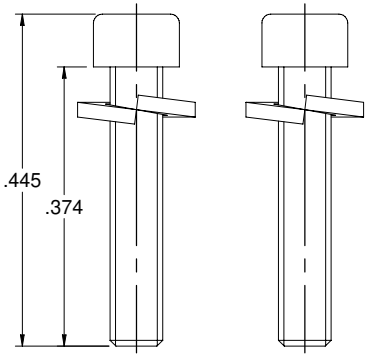

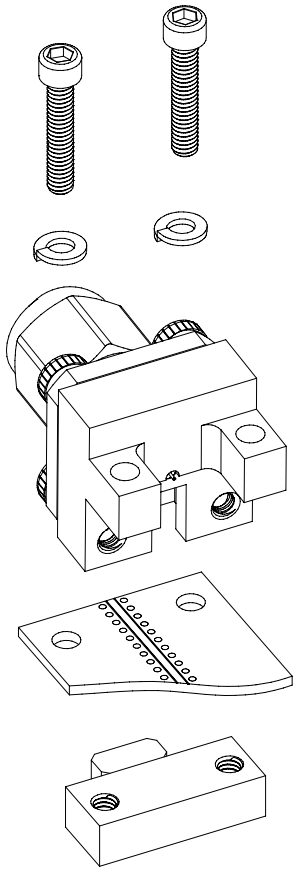

NOTES: UNLESS OTHERWISE SPECIFIED

1. MATERIAL & FINISH:
   1.1 BODY: NICKEL PLATED BRASS
   1.2 CONTACT PIN : GOLD PLATED BERYLLIUM COPPER
   1.3 INSULATOR: PTFE WHITE
   1.4 BOLT & WASHER: STAINLESS STEEL

2. ELECTRICAL:
   2.1 IMPEDANCE: 50 OHMS
   2.2 FREQUENCY RANGE: 0-50 GHz
   2.3 VOLTAGE STANDING WAVE RATIO: 1.2 MAX
   2.4 CONTACT RESISTANCE:
      2.4.1 CENER CONTACT: 6 MILLIOHM MAX
      2.4.2 OUTER CONTACT: 2.5 MILLIOHM MAX
   2.5 DIELECTRIC WITHSTANDING VOLTAGE: 500 VRMS MAX
   2.6 INSULATOR RESISTANCE: 5000 MEGOHM MIN

3. MECHANICAL:
   3.1 ENGAGEMENT/ DISENGAGEMENT FORCE: 0.23NM MAX
   3.2 COUPLING PROOF TORQUE: 1.65 NM MIN
   3.3 COUPLING NUT RETENTION: 267 N MIN
   3.4 CONTACT RETENTION: 20 N MIN
   3.5 DURABILITY: 500 CYCLES MIN

4. ENVIRONMENT:
   4.1 THERMAL SHOCK: MIL-STD-202, METHOD 107, CONDITION B.
   4.2 OPERATING TEMPERATURE: -55 TO 125°C
   4.3 SALT SPRAY: MIL-STD-202, METHOD 101, CONDITION B
   4.4 SHOCK: MIL-STD-202, METHOD 213, CONDITION I
   4.5 VIBRATION: MIL-STD-202, METHOD 204, CONDITION D
   4.6 MOISTURE RESISTANCE: MIL-STD-202, METHOD 106

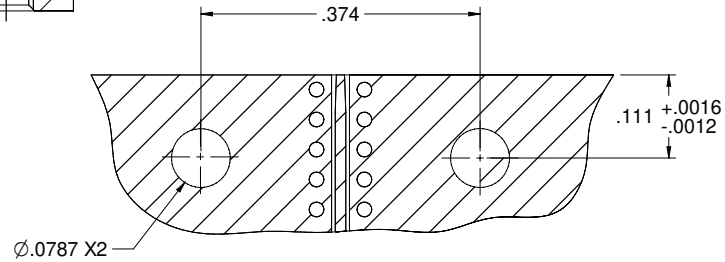

PCB LAYOUT

cinch connectivity solutions	Model No. 147-0801-201	Johnson	
	RoHS2 2011/65/EU	Title: END LAUNCH PLUG,SCREW-ON TYPE,2.4mm	
	Cage Code	Drawing No. 147-0801-201	Rev. 001
	3RD ANGLE PROJECTION		
	UNLESS OTHERWISE SPECIFIED UNITS: INCH	Drawn by: Betty.Yu	
	.XXX ± .02 .XXX ± .01 ANGLES ±5°	Date: 10/19/2017	Size C · DO NOT SCALE DRAWING · Workmanship Std. NONE · Sheet 1 of 1

This PROPRIETARY Document is property of cinch connectivity solutions. It is confidential and shall not be reproduced, used or disclosed to others for any purpose without the express written permission of cinch connectivity solutions.

INTERPRET DRAWING IN ACCORDANCE WITH ASME Y14.5-2009