Chipsmall Limited consists of a professional team with an average of over 10 year of expertise in the distribution of electronic components. Based in Hongkong, we have already established firm and mutual-benefit business relationships with customers from,Europe,America and south Asia,supplying obsolete and hard-to-find components to meet their specific needs.

With the principle of “Quality Parts,Customers Priority,Honest Operation,and Considerate Service”,our business mainly focus on the distribution of electronic components. Line cards we deal with include Microchip,ALPS,ROHM,Xilinx,Pulse,ON,Everlight and Freescale. Main products comprise IC,Modules,Potentiometer,IC Socket,Relay,Connector.Our parts cover such applications as commercial,industrial, and automotives areas.

We are looking forward to setting up business relationship with you and hope to provide you with the best service and solution. Let us make a better world for our industry!

Contact us

Tel: +86-755-8981 8866 Fax: +86-755-8427 6832
Email & Skype: info@chipsmall.com Web: www.chipsmall.com
Address: A1208, Overseas Decoration Building, #122 Zhenhua RD., Futian, Shenzhen, China

THIS DRAWING IS UNPUBLISHED. RELEASED FOR PUBLICATION - , - .
© COPYRIGHT - By - ALL RIGHTS RESERVED.

LOC	DIST
AD	00

REVISIONS

P	LTR	DESCRIPTION	DATE	DWN	APVD
	E4	REVISED PER ECO-11-020673	17OCT11	KH	JO

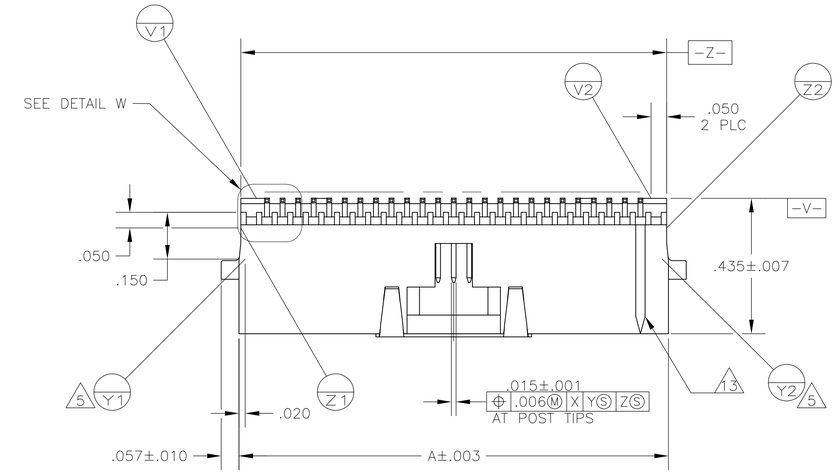

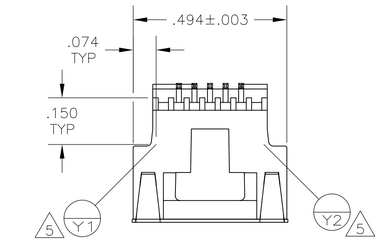

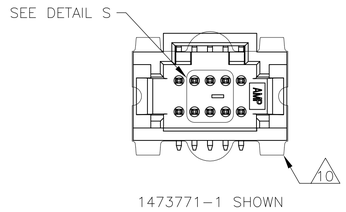

1 .000030 GOLD IN LOCALIZED PLATE AREA, .000150 TIN-LEAD ON SOLDER TAILS ALL OVER .000050 NICKEL.

2 CIRCUIT IDENTIFICATION FEATURE OMITTED ON 10 POSITION HEADER ASSEMBLIES.

3 DIMENSION APPLIES AT BASE OF SHROUD.

4 THE NOTED DIMENSIONS APPLY AT THE MATING FACE OF THE HOUSING.

5 (Y3) (Y4) ARE LOCATED THE SAME AS (Y1) (Y2) EXCEPT ON OPPOSITE SIDE OF HOUSING.

6 VACUUM COVER DESIGNED FOR .160 [4mm] DIA NOZZLE. VACUUM COVER TO BE REMOVED AFTER SOLDERING.

7 PACKAGED IN TAPE AND REEL PER EIA-481 SPECIFICATIONS. SEE CHART FOR TAPE WIDTHS.

8 .265 [6.75mm] MIN TARGET AREA FOR VACUUM PICK-UP.

9 HOUSING: PPA.
CONTACT: PHOSPHOR BRONZE.
VACUUM COVER: ALUMINUM

10 VACUUM COVER SHOWN IN PHANTOM LINE.

11 .000030 GOLD IN LOCALIZED PLATE AREA, .000150 TIN ON SOLDER TAILS, ALL OVER .000050 NICKEL.

12 OBSOLETE PARTS: OBSOLETE CIS STREAMLINING PER D.RENAUD / D.SINISI

13 NO CIRCUIT IDENTIFICATION FEATURE ON 10,12,20,24 AND 30 POSITION PARTS.

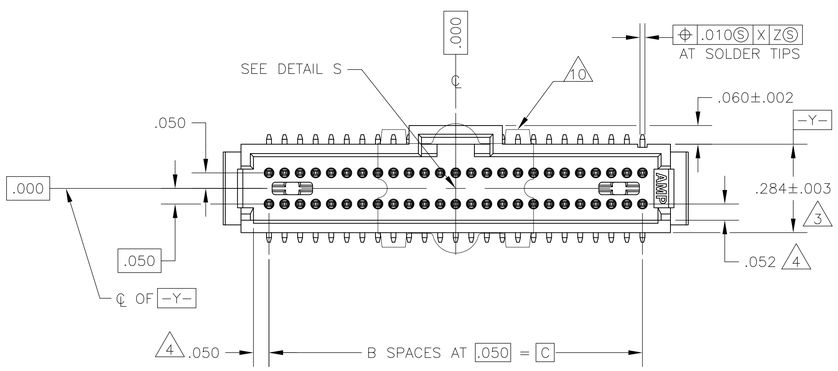

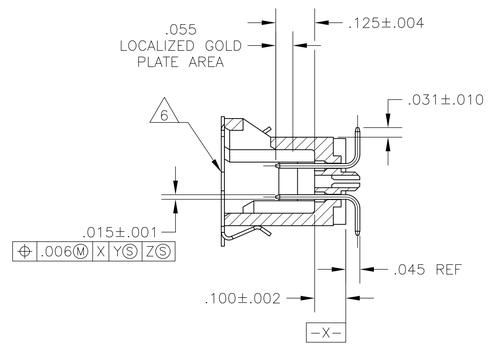

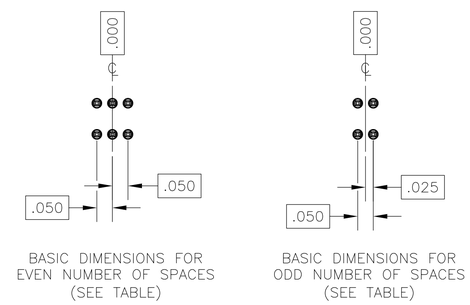

DETAIL S

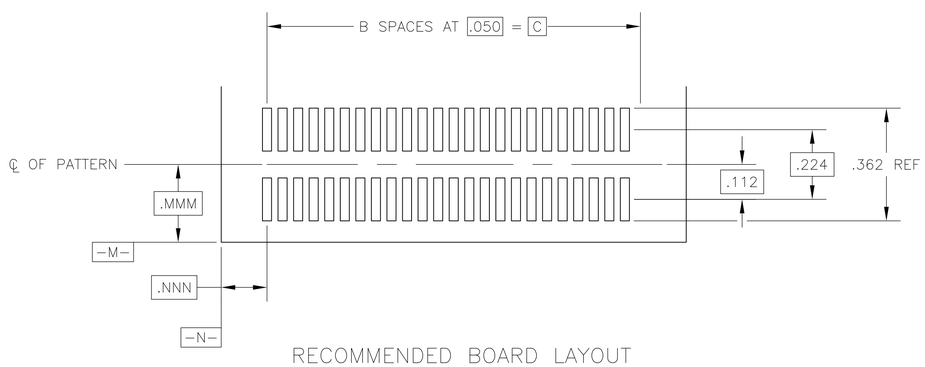

RECOMMENDED BOARD LAYOUT

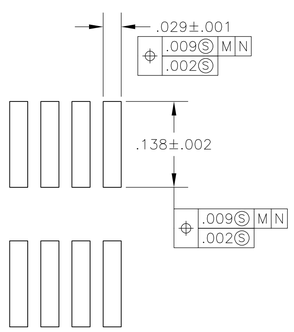

DETAIL G
SCALE 8:1

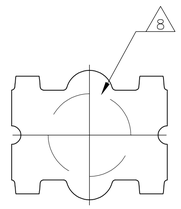

VACUUM COVER

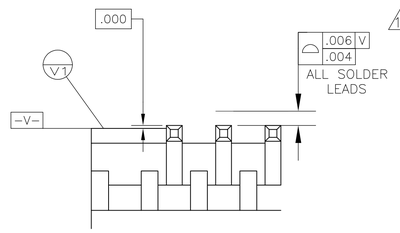

DETAIL W

12 OBSOLETE	56MM	1.050	21	1.230	44	11 ~~6-147377-0~~
	44mm	.550	11	.730	24	11 5-147377-9
	88mm	2.450	49	2.630	100	11 5-147377-8
	88mm	1.950	39	2.130	80	11 5-147377-7
	72mm	1.450	29	1.630	60	11 5-147377-6
	56mm	1.200	24	1.380	50	11 5-147377-5
	56mm	.950	19	1.130	40	11 5-147377-4
	56mm	.700	14	.880	30	11 5-147377-3
	44mm	.450	9	.630	20	11 5-147377-2
	32mm	.200	4	-	10	11 5-147377-1
12 OBSOLETE	56MM	1.050	21	1.230	44	~~1-147377-0~~
	44mm	.550	11	.730	24	147377-9
	88mm	2.450	49	2.630	100	147377-8
	88mm	1.950	39	2.130	80	147377-7
	72mm	1.450	29	1.630	60	147377-6
	56mm	1.200	24	1.380	50	147377-5
	56mm	.950	19	1.130	40	147377-4
	56mm	.700	14	.880	30	147377-3
	44mm	.450	9	.630	20	147377-2
	32mm	.200	4	-	10	147377-1
	TAPE WIDTHS	C	B	A	NO OF POSN	PART NUMBER

THIS DRAWING IS A CONTROLLED DOCUMENT.

DIMENSIONS: INCHES

TOLERANCES UNLESS OTHERWISE SPECIFIED:
0 PLC ± -
1 PLC ± -
2 PLC ± -
3 PLC ± .005
4 PLC ± -
ANGLES ± -

MATERIAL 9

FINISH SEE NOTES

DWN B. HAYMAKER 17JAN00
CHK J. MOSIER 17JAN00
APVD J. MOSIER 17JAN00

PRODUCT SPEC 108-1093
APPLICATION SPEC 114-25035
WEIGHT -

TE Connectivity

NAME HEADER ASSEMBLY, W/SIDE & END LATCHES, VERTICAL, SHROUDED, DOUBLE ROW, SURFACE MOUNT AMPMODU System 50, W/O HOLDDOWNS

SIZE	CAGE CODE	DRAWING NO	RESTRICTED TO
A1	00779	C-147377	-

CUSTOMER DRAWING SCALE 4:1 SHEET 1 OF 1 REV E4