Chipsmall Limited consists of a professional team with an average of over 10 year of expertise in the distribution of electronic components. Based in Hongkong, we have already established firm and mutual-benefit business relationships with customers from,Europe,America and south Asia,supplying obsolete and hard-to-find components to meet their specific needs.

With the principle of “Quality Parts,Customers Priority,Honest Operation,and Considerate Service”,our business mainly focus on the distribution of electronic components. Line cards we deal with include Microchip,ALPS,ROHM,Xilinx,Pulse,ON,Everlight and Freescale. Main products comprise IC,Modules,Potentiometer,IC Socket,Relay,Connector.Our parts cover such applications as commercial,industrial, and automotives areas.

We are looking forward to setting up business relationship with you and hope to provide you with the best service and solution. Let us make a better world for our industry!

Contact us

Tel: +86-755-8981 8866 Fax: +86-755-8427 6832
Email & Skype: info@chipsmall.com Web: www.chipsmall.com
Address: A1208, Overseas Decoration Building, #122 Zhenhua RD., Futian, Shenzhen, China

THIS DRAWING IS UNPUBLISHED. RELEASED FOR PUBLICATION ,19 .
© COPYRIGHT 19 BY AMP INCORPORATED. ALL RIGHTS RESERVED.

LOC	DIST
AD	25

REVISIONS

P	LTR	DESCRIPTION	DATE	DWN	APVD
	0	DRAWN	-	-	-
	A	REV PER EC 0G21-80-99	06 APR 99	BC	CR

1. HOUSING MATERIAL: GLASS-FILLED POLYESTER. COLOR: GRAY.
2. CONTACT MATERIAL: PHOSPHOR BRONZE.
3. PART NUMBER AND DATE CODE HOT STAMPED IN THIS APPROXIMATE AREA.
4. ACTION PIN POSTS REQUIRE 1.57[.062] MINIMUM THICK PC BOARD. RECOMMENDED PC BOARD DRILLED HOLES ARE ø1.151±0.025[.0453±.0010] WITH 0.02-0.08[.001-.003] COPPER AND 0.008[.0003] MINIMUM TIN-LEAD PLATING. FINISHED HOLES AFTER PLATING ø1.02±0.08[.040±.002].
5. CONTACT FINISH: DIN 41612 CLASS 2 IN CONTACT AREA. TIN-LEAD PLATE ON POSTS.
6. TAIL LENGTH AFTER SEATED IN PC BOARD.
7. CONTACT POINT AFTER SEATED IN PC BOARD.
8. HOT STAMPING ON THIS SIDE.

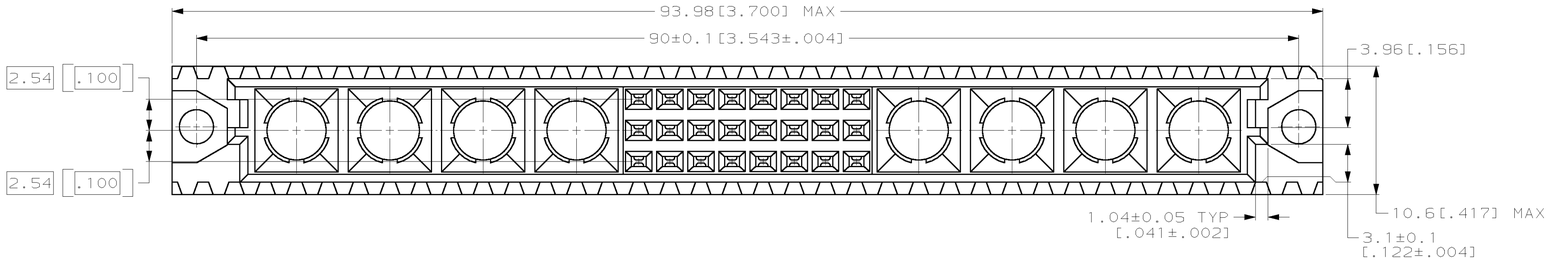

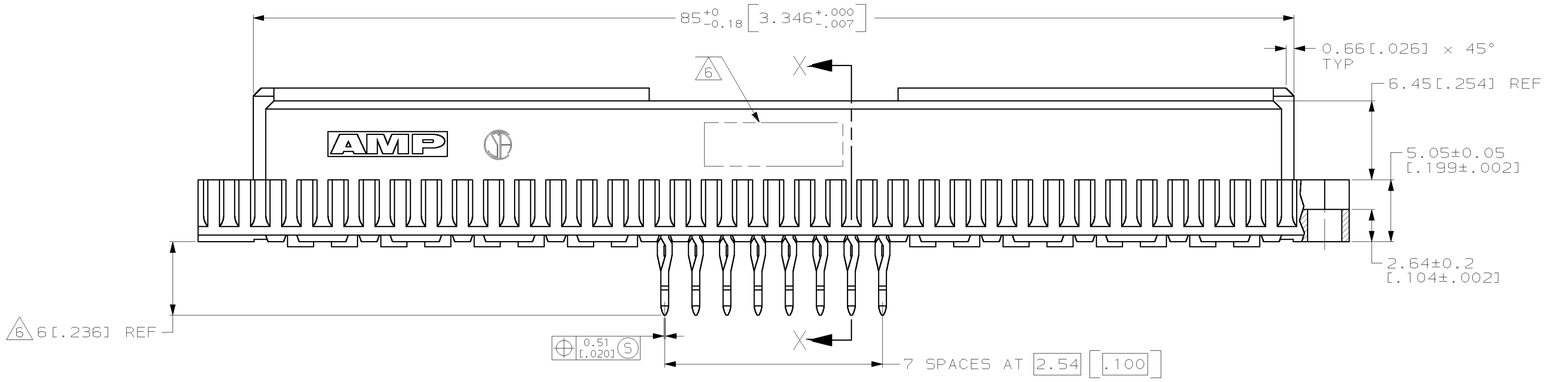

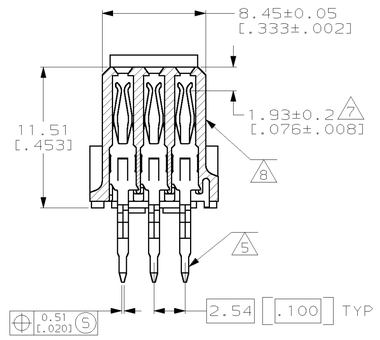

SECTION X-X

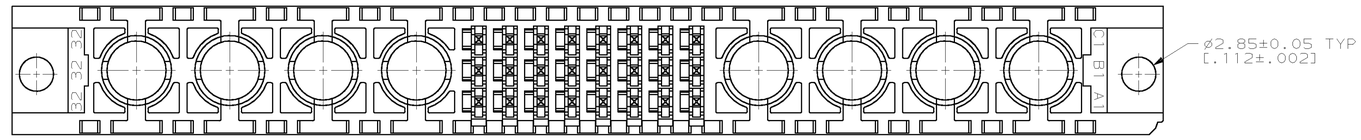

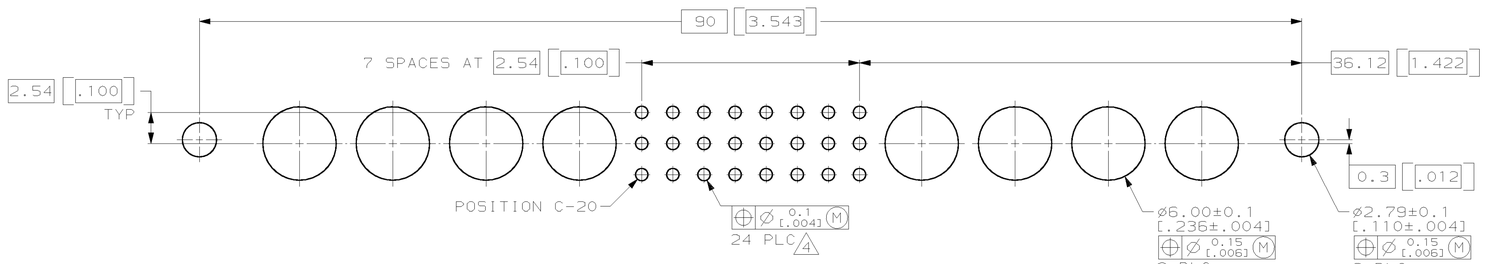

PC BOARD LAYOUT

148384-5
PART NUMBER

THIS DRAWING IS A CONTROLLED DOCUMENT.

DIMENSIONS: mm

TOLERANCES UNLESS OTHERWISE SPECIFIED:
0 PLC ±-
1 PLC ±-
2 PLC ±0.13[.005]
3 PLC ±-
4 PLC ±-
ANGLES ±-

MATERIAL: HOUSING: 1 POST: 2
FINISH: - POST: 5

DWN L. BRINER 8/11/97
CHK R. PATTERSON 8/11/97
APVD R. PATTERSON 8/11/97
PRODUCT SPEC —
APPLICATION SPEC —
WEIGHT —

AMP Incorporated
Harrisburg, PA 17105-3608

NAME
RECEPTACLE ASSEMBLY, EUROCARD, TYPE M, 24 + 8 POSITION

SIZE	CAGE CODE	DRAWING NO	RESTRICTED TO
A1	00779	C-148384	—

CUSTOMER DRAWING | SCALE 4:1 | SHEET 1 OF 1 | REV A