Chipsmall Limited consists of a professional team with an average of over 10 year of expertise in the distribution of electronic components. Based in Hongkong, we have already established firm and mutual-benefit business relationships with customers from,Europe,America and south Asia,supplying obsolete and hard-to-find components to meet their specific needs.

With the principle of “Quality Parts,Customers Priority,Honest Operation,and Considerate Service”,our business mainly focus on the distribution of electronic components. Line cards we deal with include Microchip,ALPS,ROHM,Xilinx,Pulse,ON,Everlight and Freescale. Main products comprise IC,Modules,Potentiometer,IC Socket,Relay,Connector.Our parts cover such applications as commercial,industrial, and automotives areas.

We are looking forward to setting up business relationship with you and hope to provide you with the best service and solution. Let us make a better world for our industry!

Contact us

Tel: +86-755-8981 8866 Fax: +86-755-8427 6832
Email & Skype: info@chipsmall.com Web: www.chipsmall.com
Address: A1208, Overseas Decoration Building, #122 Zhenhua RD., Futian, Shenzhen, China

THIS DRAWING IS UNPUBLISHED. RELEASED FOR PUBLICATION -,- .
© COPYRIGHT - BY TYCO ELECTRONICS CORPORATION. ALL RIGHTS RESERVED.

LOC	DIST
AD	00

REVISIONS

P	LTR	DESCRIPTION	DATE	DWN	APVD
	B	REV PER EC 0S12-0302-05	05DEC05	BC	GS
	C	ECR-10-019054	15SEP10	DP	MQW

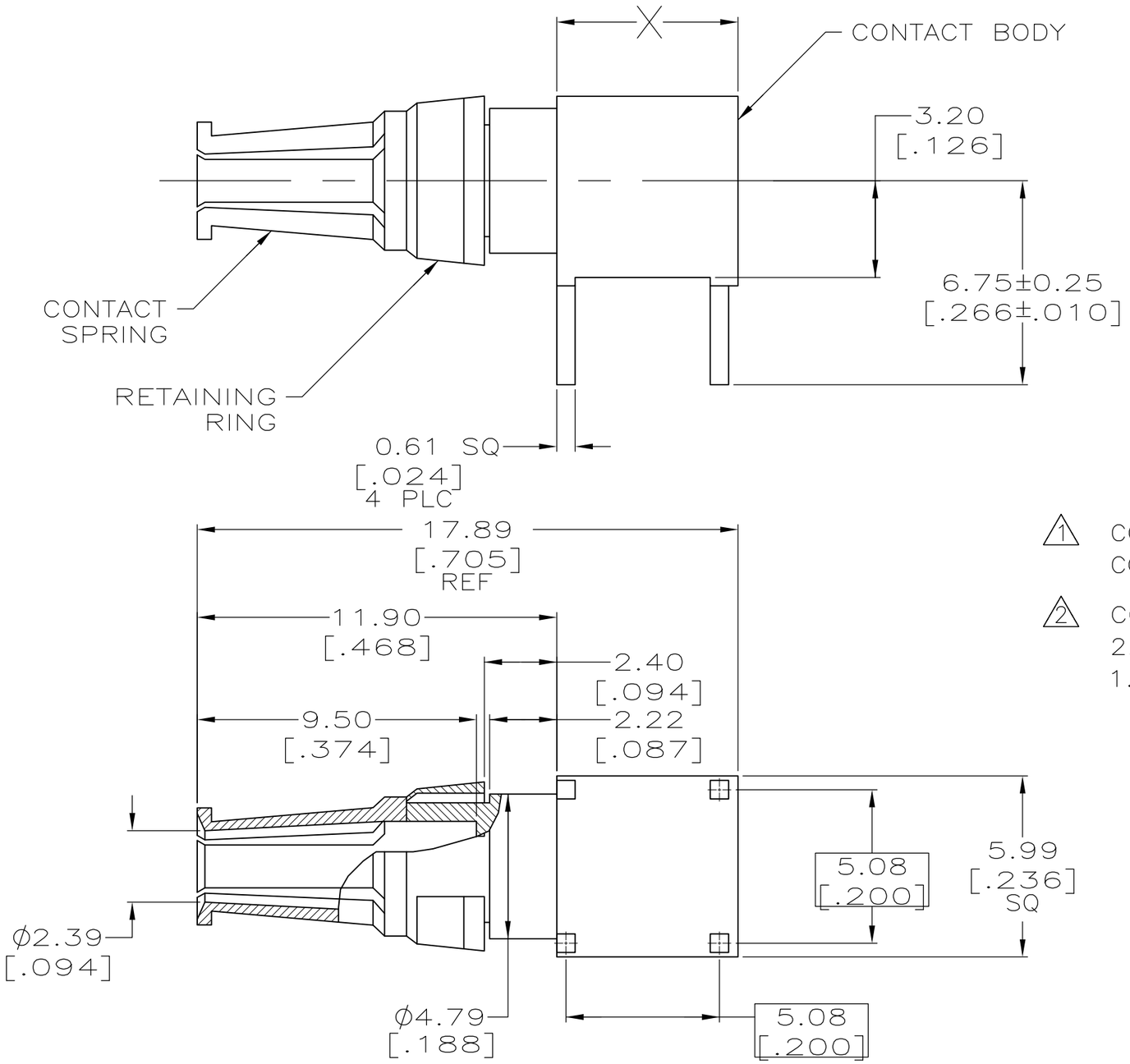

1. CONTACT SPRING & RETAINING RING: BERYLLIUM COPPER. CONTACT BODY: BRASS.

2. CONTACT FINISH: 0.76μm[.000030] MIN GOLD IN CONTACT AREA, 2.54μm[.000100] MIN TIN-LEAD IN AREA "X", ALL OVER 1.27μm[.000050] MIN NICKEL.

148534-1

PART NUMBER

THIS DRAWING IS A CONTROLLED DOCUMENT.

DIMENSIONS: INCHES

TOLERANCES UNLESS OTHERWISE SPECIFIED:
~~0 PLC ± -~~ ±0.2
~~1 PLC ± -~~
~~2 PLC ± 0.13 [.005]~~
~~3 PLC ± -~~
~~4 PLC ± -~~
~~ANGLES ± -~~

MATERIAL 1

FINISH 2

DWN	B.CARBO	04 JUN 99
CHK	C.RICHARD	04 JUN 99
APVD	C.RICHARD	04 JUN 99
PRODUCT SPEC	—	
APPLICATION SPEC	—	
WEIGHT	—	

Tyco Electronics

Tyco Electronics Corporation
Harrisburg, PA 17105-3608

NAME: POWER CONTACT, EUROCARD TYPE M, FEMALE 90 DEG, PRINTED CIRCUIT BOARD MOUNT, MFBL, WITH SOLDER POSTS, (40 AMP)

SIZE	CAGE CODE	DRAWING NO	RESTRICTED TO
A3	00779	C-148534	—

CUSTOMER DRAWING | SCALE 6:1 | SHEET 1 OF 1 | REV C

AMP 1470-19 REV 31MAR2000

05DEC2005 2:28pm US040973 H:\dmread\148534_1_c.dwg