Chipsmall Limited consists of a professional team with an average of over 10 year of expertise in the distribution of electronic components. Based in Hongkong, we have already established firm and mutual-benefit business relationships with customers from,Europe,America and south Asia,supplying obsolete and hard-to-find components to meet their specific needs.

With the principle of “Quality Parts,Customers Priority,Honest Operation,and Considerate Service”,our business mainly focus on the distribution of electronic components. Line cards we deal with include Microchip,ALPS,ROHM,Xilinx,Pulse,ON,Everlight and Freescale. Main products comprise IC,Modules,Potentiometer,IC Socket,Relay,Connector.Our parts cover such applications as commercial,industrial, and automotives areas.

We are looking forward to setting up business relationship with you and hope to provide you with the best service and solution. Let us make a better world for our industry!

Contact us

Tel: +86-755-8981 8866 Fax: +86-755-8427 6832
Email & Skype: info@chipsmall.com Web: www.chipsmall.com
Address: A1208, Overseas Decoration Building, #122 Zhenhua RD., Futian, Shenzhen, China

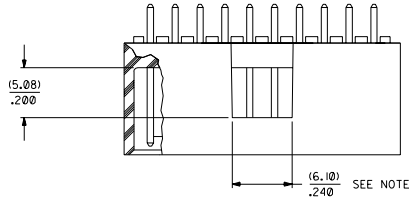

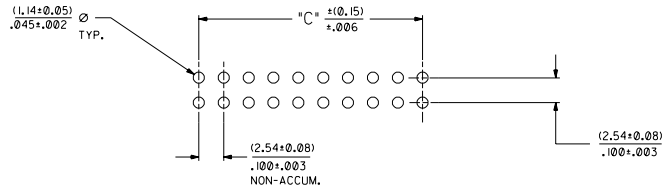

RECOMMENDED P.C. BOARD HOLE LAYOUT

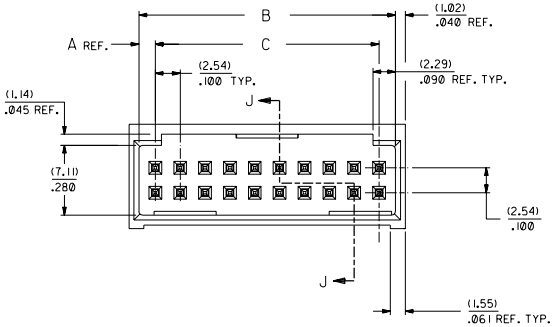

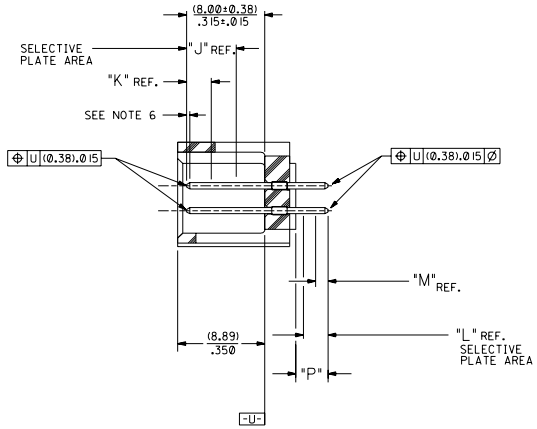

SECTION J-J

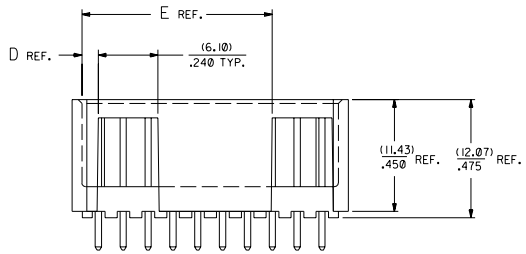

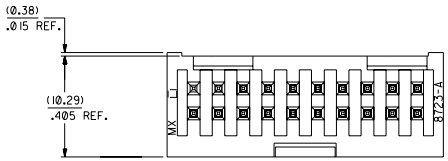

CKT.	DIM. "A"	DIM. "B"	DIM. "C"	DIM. "D"	DIM. "E"			
06	(1.68) .066	(8.43) .332	(5.08) .200	(1.68) .066				
08	(1.68) .066	(10.97) .432	(7.62) .300	(1.68) .066				
10	(1.68) .066	(13.51) .532	(10.16) .400	(4.22) .166				
12	(1.68) .066	(16.05) .632	(12.70) .500	(4.22) .166				
14	(1.68) .066	(18.59) .732	(15.24) .600	(6.76) .266				
16	(1.68) .066	(21.13) .832	(17.78) .700	(6.76) .266				
18	(1.68) .066	(23.67) .932	(20.32) .800	(9.30) .366				
20	(1.68) .066	(26.21) 1.032	(22.86) .900	(1.68) .066	(19.46) .766			
22	(1.68) .066	(28.75) 1.132	(25.40) 1.000	(1.68) .066	(22.00) .866			
24	(1.68) .066	(31.29) 1.232	(27.94) 1.100	(1.68) .066	(24.54) .966			
26	(1.68) .066	(33.83) 1.332	(30.48) 1.200	(1.68) .066	(27.08) 1.066			
28	(1.68) .066	(36.37) 1.432	(33.02) 1.300	(1.68) .066	(29.62) 1.166			
30	(1.68) .066	(38.91) 1.532	(35.56) 1.400	(1.68) .066	(32.16) 1.266			
32	(1.68) .066	(41.45) 1.632	(38.10) 1.500	(1.68) .066	(34.70) 1.366			
34	(1.68) .066	(43.99) 1.732	(40.64) 1.600	(1.68) .066	(37.24) 1.466			
36	(1.68) .066	(46.53) 1.832	(43.18) 1.700	(1.68) .066	(39.78) 1.566			
38	(1.68) .066	(49.07) 1.932	(45.72) 1.800	(1.68) .066	(42.32) 1.666			
40	(1.68) .066	(51.61) 2.032	(48.26) 1.900	(1.68) .066	(44.86) 1.766			
42	(1.68) .066	(54.15) 2.132	(50.80) 2.000	(1.68) .066	(47.40) 1.866			
44	(1.68) .066	(56.69) 2.232	(53.34) 2.100	(1.68) .066	(49.94) 1.966			
46	(1.68) .066	(59.23) 2.332	(55.88) 2.200	(1.68) .066	(52.48) 2.066			
48	(1.68) .066	(61.77) 2.432	(58.42) 2.300	(1.68) .066	(55.02) 2.166			
50	(1.68) .066	(64.31) 2.532	(60.96) 2.400	(1.68) .066	(57.56) 2.266			
52	(1.68) .066	(66.85) 2.632	(63.50) 2.500	(1.68) .066	(60.10) 2.366			
54	(1.68) .066	(69.39) 2.732	(66.04) 2.600	(1.68) .066	(62.64) 2.466			
56	(1.68) .066	(71.93) 2.832	(68.58) 2.700	(1.68) .066	(65.18) 2.566			
58	(1.68) .066	(74.47) 2.932	(71.12) 2.800	(1.68) .066	(67.72) 2.666			
60	(1.68) .066	(77.01) 3.032	(73.66) 2.900	(1.68) .066	(70.26) 2.766			
62	(1.68) .066	(79.55) 3.132	(76.20) 3.000	(1.68) .066	(72.80) 2.866			
64	(1.68) .066	(82.09) 3.232	(78.74) 3.100	(1.68) .066	(75.34) 2.966			
66	(1.68) .066	(84.63) 3.332	(81.28) 3.200	(1.68) .066	(77.88) 3.066			
68	(1.68) .066	(87.17) 3.432	(83.82) 3.300	(1.68) .066	(80.42) 3.166			
70	(1.68) .066	(89.71) 3.532	(86.36) 3.400	(1.68) .066	(82.96) 3.266			
72	(1.68) .066	(92.25) 3.632	(88.90) 3.500	(1.68) .066	(85.50) 3.366			

NOTES:

1- 20 CIRCUIT SIZE SHOWN FOR ILLUSTRATION PURPOSES.
2- PIN PUSHOUT FORCE: (17.79 N)/4 LBS.
3- PINS MUST MEET SOLDERABILITY SPEC. MIL-STD-202 METHOD 208B.
4- WINDOW NOT AVAILABLE ON 6 AND 8 CIRCUIT SIZE.
5- FOR CHARTED DIMENSIONS AND ASSEMBLY NO.S NOT SHOWN ON THIS SHEET - SEE SHEET 2.
6- ROW TO ROW PIN HEIGHT VARIATION MUST NOT EXCEED (0.13)/.005 IN.
7- PRODUCT CONFORMS TO PS-8723.

MATERIAL:

SHROUDED WAFER: GLASS FILLED POLYESTER, 94V-0; COLOR: BLACK.
PINS: PHOSPHOR BRONZE,
SEE SHEET 2 FOR FINISHES.

ASSEMBLY STYLE "A" AND "B"

U	ADD -9003 OPT UCP2004-2280 DMORGAN 04/05/20		
T	LEAD FREE UCP2004-1770 RLWHITE 04/04/26		
S	ADD -9002 OPTION ECN #UCP2004-052 DMORGAN 04/01/12		
R2	TAB DIF DIM 6 CIR ECN #UDT1999-0145 DMORGAN 98/09/01		
R1	ADD WDO LATCH NOTE ECN #UDT1998-0393 DMORGAN 98/06/23		
R	ADDED SHEET 7 PER ECR NO U61208 03-29-96	TSE	
Q	REMOVE EDP NO.'S PER ECR NO U58225 09-19-94	BJS	
P	CHGD WINDOW NOTES PER ECR NO U30376 05-04-93	BJS	
O	CHANGED MATERIAL PER ECR NO U30146 01-22-93	BJS	
N	REVISED & REDRAWN PER ECR NO U21073 05-26-92	BJS	
MFG.	SH.	REV.	LTR. REVISIONS

7	U
6	T
5	R2
4	T
3	R2
2	T
1	U

DIMENSIONS SHOWN (METRIC) INCH

UNLESS OTHERWISE SPECIFIED TOLERANCES: ANGULAR ± 1/2°

	INCH	METRIC
3 PLACE	± .005	---
2 PLACE	± .01	± 0.13
1 PLACE	---	± 0.25

DRAFT WHERE APPLICABLE MUST REMAIN WITHIN DIMENSIONS

DRWN. BY RB
CHK'D. BY
APP'D. BY
SCALE 4 : 1

▽ = 0 ▼ = 0 REVISE ONLY ON CAD SYSTEM

TITLE
SALES ASSEMBLY
WAFER- STRAIGHT MT. FULLY SHROUDED
.100 GRID-FOR USE W/.025 SQ. PINS
WITH .066 END WALLS

MOLEX INCORPORATED
LISLE, ILL. 60532 U.S.A.

SHEET NO. 1 OF 7
DATE 92/07/17

PART NO. SEE CHART
DRWG. NO. SDA-8723-******

FILE NAME 8723A.1

THIS DRAWING CONTAINS INFORMATION THAT IS PROPRIETARY TO MOLEX INC. AND SHOULD NOT BE USED WITHOUT WRITTEN PERMISSION

REV. DA SIZE D

ENGINEERING PART NUMBER A-8723-	RELEASE FOR MANUFACTURE			P REF.	PLATING TYPE	CONNECTOR END PLATING TYPE	J LENGTH	K MEAS.			P.C. BOARD END PLATING TYPE	L LENGTH	M MEAS.	PACKAGING INFORMATION PK-70873-	
06A164 / 72A164	RFM			(3.30) .130	TIN	TIN	———	(2.54) .100			TIN	———	(1.27) .050	0018	
06B164 / 72B164	RFM			(5.08) .200	TIN	TIN	———	(2.54) .100			TIN	———	(1.27) .050	0018	
06A571 / 72A571	RFM			(3.30) .130	15 GOLD	GOLD	(5.08) .200	(2.54) .100			TIN	(2.54) .100	(1.27) .050	0018	
06B571 / 72B571	RFM			(5.08) .200	15 GOLD	GOLD	(5.08) .200	(2.54) .100			TIN	(2.54) .100	(1.27) .050	0018	
06A574 / 72A574	RFM			(3.30) .130	30 GOLD	GOLD	(5.08) .200	(2.54) .100			TIN	(2.54) .100	(1.27) .050	0018	
06B574 / 72B574	RFM			(5.08) .200	30 GOLD	GOLD	(5.08) .200	(2.54) .100			TIN	(2.54) .100	(1.27) .050	0018	
06A596 / 72A596				(3.30) .130	50 GOLD	GOLD	(5.08) .200	(2.54) .100			TIN	(2.54) .100	(1.27) .050	0018	
06B596 / 72B596				(5.08) .200	50 GOLD	GOLD	(5.08) .200	(2.54) .100			TIN	(2.54) .100	(1.27) .050	0018	

8723

8723

PLATING:

TIN .000150 MINIMUM TIN OVER .000050 MINIMUM NICKEL PLATE.

15 GOLD .000015 MINIMUM GOLD PLATE IN SELECTED AREA AND .000075 MINIMUM TIN IN SELECTED AREA OVER .000050 MINIMUM NICKEL OVER-ALL.

30 GOLD .000030 MINIMUM GOLD PLATE IN SELECTED AREA AND .000075 MINIMUM TIN IN SELECTED AREA OVER .000050 MINIMUM NICKEL OVER-ALL.

50 GOLD .000050 MINIMUM GOLD PLATE IN SELECTED AREA AND .000075 MINIMUM TIN IN SELECTED AREA OVER .000050 MINIMUM NICKEL OVER-ALL.

NO. OF CKTS	TIN		TIN		15 GOLD		15 GOLD		30 GOLD		30 GOLD		50 GOLD		50 GOLD					
	EDP NUMBER	ENG NUMBER	EDP NUMBER	ENG NUMBER	EDP NUMBER	ENG NUMBER	EDP NUMBER	ENG NUMBER	EDP NUMBER	ENG NUMBER	EDP NUMBER	ENG NUMBER	EDP NUMBER	ENG NUMBER	EDP NUMBER	ENG NUMBER	EDP NUMBER	ENG NUMBER	EDP NUMBER	ENG NUMBER
06	15-42-6006	A-8723-06A164	15-42-6106	A-8723-06B164	15-29-6006	A-8723-06A571	15-29-6106	A-8723-06B571	15-41-7006	A-8723-06A574	15-41-7106	A-8723-06B574		A-8723-06A596		A-8723-06B596				
08	15-42-6008	A-8723-08A164	15-42-6108	A-8723-08B164	15-29-6008	A-8723-08A571	15-29-6108	A-8723-08B571	15-41-7008	A-8723-08A574	15-41-7108	A-8723-08B574		A-8723-08A596		A-8723-08B596				
10	15-42-6010	A-8723-10A164	15-42-6110	A-8723-10B164	15-29-6010	A-8723-10A571	15-29-6110	A-8723-10B571	15-41-7010	A-8723-10A574	15-41-7110	A-8723-10B574		A-8723-10A596		A-8723-10B596				
12	15-42-6012	A-8723-12A164	15-42-6112	A-8723-12B164	15-29-6012	A-8723-12A571	15-29-6112	A-8723-12B571	15-41-7012	A-8723-12A574	15-41-7112	A-8723-12B574		A-8723-12A596		A-8723-12B596				
14	15-42-6014	A-8723-14A164	15-42-6114	A-8723-14B164	15-29-6014	A-8723-14A571	15-29-6114	A-8723-14B571	15-41-7014	A-8723-14A574	15-41-7114	A-8723-14B574		A-8723-14A596		A-8723-14B596				
16	15-42-6016	A-8723-16A164	15-42-6116	A-8723-16B164	15-29-6016	A-8723-16A571	15-29-6116	A-8723-16B571	15-41-7016	A-8723-16A574	15-41-7116	A-8723-16B574		A-8723-16A596		A-8723-16B596				
18	15-42-6018	A-8723-18A164	15-42-6118	A-8723-18B164	15-29-6018	A-8723-18A571	15-29-6118	A-8723-18B571	15-41-7018	A-8723-18A574	15-41-7118	A-8723-18B574		A-8723-18A596		A-8723-18B596				
20	15-42-6020	A-8723-20A164	15-42-6120	A-8723-20B164	15-29-6020	A-8723-20A571	15-29-6120	A-8723-20B571	15-41-7020	A-8723-20A574	15-41-7120	A-8723-20B574		A-8723-20A596		A-8723-20B596				
22	15-42-6022	A-8723-22A164	15-42-6122	A-8723-22B164	15-29-6022	A-8723-22A571	15-29-6122	A-8723-22B571	15-41-7022	A-8723-22A574	15-41-7122	A-8723-22B574		A-8723-22A596		A-8723-22B596				
24	15-42-6024	A-8723-24A164	15-42-6124	A-8723-24B164	15-29-6024	A-8723-24A571	15-29-6124	A-8723-24B571	15-41-7024	A-8723-24A574	15-41-7124	A-8723-24B574		A-8723-24A596		A-8723-24B596				
26	15-42-6026	A-8723-26A164	15-42-6126	A-8723-26B164	15-29-6026	A-8723-26A571	15-29-6126	A-8723-26B571	15-41-7026	A-8723-26A574	15-41-7126	A-8723-26B574		A-8723-26A596		A-8723-26B596				
28	15-42-6028	A-8723-28A164	15-42-6128	A-8723-28B164	15-29-6028	A-8723-28A571	15-29-6128	A-8723-28B571	15-41-7028	A-8723-28A574	15-41-7128	A-8723-28B574		A-8723-28A596		A-8723-28B596				
30	15-42-6030	A-8723-30A164	15-42-6130	A-8723-30B164	15-29-6030	A-8723-30A571	15-29-6130	A-8723-30B571	15-41-7030	A-8723-30A574	15-41-7130	A-8723-30B574		A-8723-30A596		A-8723-30B596				
32	15-42-6032	A-8723-32A164	15-42-6132	A-8723-32B164	15-29-6032	A-8723-32A571	15-29-6132	A-8723-32B571	15-41-7032	A-8723-32A574	15-41-7132	A-8723-32B574		A-8723-32A596		A-8723-32B596				
34	15-42-6034	A-8723-34A164	15-42-6134	A-8723-34B164	15-29-6034	A-8723-34A571	15-29-6134	A-8723-34B571	15-41-7034	A-8723-34A574	15-41-7134	A-8723-34B574		A-8723-34A596		A-8723-34B596				
36	15-42-6036	A-8723-36A164	15-42-6136	A-8723-36B164	15-29-6036	A-8723-36A571	15-29-6136	A-8723-36B571	15-41-7036	A-8723-36A574	15-41-7136	A-8723-36B574		A-8723-36A596		A-8723-36B596				
38	15-42-6038	A-8723-38A164	15-42-6138	A-8723-38B164	15-29-6038	A-8723-38A571	15-29-6138	A-8723-38B571	15-41-7038	A-8723-38A574	15-41-7138	A-8723-38B574		A-8723-38A596		A-8723-38B596				
40	15-42-6040	A-8723-40A164	15-42-6140	A-8723-40B164	15-29-6040	A-8723-40A571	15-29-6140	A-8723-40B571	15-41-7040	A-8723-40A574	15-41-7140	A-8723-40B574		A-8723-40A596		A-8723-40B596				
42	15-42-6042	A-8723-42A164	15-42-6142	A-8723-42B164	15-29-6042	A-8723-42A571	15-29-6142	A-8723-42B571	15-41-7042	A-8723-42A574	15-41-7142	A-8723-42B574		A-8723-42A596		A-8723-42B596				
44	15-42-6044	A-8723-44A164	15-42-6144	A-8723-44B164	15-29-6044	A-8723-44A571	15-29-6144	A-8723-44B571	15-41-7044	A-8723-44A574	15-41-7144	A-8723-44B574		A-8723-44A596		A-8723-44B596				
46	15-42-6046	A-8723-46A164	15-42-6146	A-8723-46B164	15-29-6046	A-8723-46A571	15-29-6146	A-8723-46B571	15-41-7046	A-8723-46A574	15-41-7146	A-8723-46B574		A-8723-46A596		A-8723-46B596				
48	15-42-6048	A-8723-48A164	15-42-6148	A-8723-48B164	15-29-6048	A-8723-48A571	15-29-6148	A-8723-48B571	15-41-7048	A-8723-48A574	15-41-7148	A-8723-48B574		A-8723-48A596		A-8723-48B596				
50	15-42-6050	A-8723-50A164	15-42-6150	A-8723-50B164	15-29-6050	A-8723-50A571	15-29-6150	A-8723-50B571	15-41-7050	A-8723-50A574	15-41-7150	A-8723-50B574		A-8723-50A596		A-8723-50B596				
52	15-42-6052	A-8723-52A164	15-42-6152	A-8723-52B164	15-29-6052	A-8723-52A571	15-29-6152	A-8723-52B571	15-41-7052	A-8723-52A574	15-41-7152	A-8723-52B574		A-8723-52A596		A-8723-52B596				
54	15-42-6054	A-8723-54A164	15-42-6154	A-8723-54B164	15-29-6054	A-8723-54A571	15-29-6154	A-8723-54B571	15-41-7054	A-8723-54A574	15-41-7154	A-8723-54B574		A-8723-54A596		A-8723-54B596				
56	15-42-6056	A-8723-56A164	15-42-6156	A-8723-56B164	15-29-6056	A-8723-56A571	15-29-6156	A-8723-56B571	15-41-7056	A-8723-56A574	15-41-7156	A-8723-56B574		A-8723-56A596		A-8723-56B596				
58	15-42-6058	A-8723-58A164	15-42-6158	A-8723-58B164	15-29-6058	A-8723-58A571	15-29-6158	A-8723-58B571	15-41-7058	A-8723-58A574	15-41-7158	A-8723-58B574		A-8723-58A596		A-8723-58B596				
60	15-42-6060	A-8723-60A164	15-42-6160	A-8723-60B164	15-29-6060	A-8723-60A571	15-29-6160	A-8723-60B571	15-41-7060	A-8723-60A574	15-41-7160	A-8723-60B574		A-8723-60A596		A-8723-60B596				
62	15-42-6062	A-8723-62A164	15-42-6162	A-8723-62B164	15-29-6062	A-8723-62A571	15-29-6162	A-8723-62B571	15-41-7062	A-8723-62A574	15-41-7162	A-8723-62B574		A-8723-62A596		A-8723-62B596				
64	15-42-6064	A-8723-64A164	15-42-6164	A-8723-64B164	15-29-6064	A-8723-64A571	15-29-6164	A-8723-64B571	15-41-7064	A-8723-64A574	15-41-7164	A-8723-64B574		A-8723-64A596		A-8723-64B596				
66	15-42-6066	A-8723-66A164	15-42-6166	A-8723-66B164	15-29-6066	A-8723-66A571	15-29-6166	A-8723-66B571	15-41-7066	A-8723-66A574	15-41-7166	A-8723-66B574		A-8723-66A596		A-8723-66B596				
68	15-42-6068	A-8723-68A164	15-42-6168	A-8723-68B164	15-29-6068	A-8723-68A571	15-29-6168	A-8723-68B571	15-41-7068	A-8723-68A574	15-41-7168	A-8723-68B574		A-8723-68A596		A-8723-68B596				
70	15-42-6070	A-8723-70A164	15-42-6170	A-8723-70B164	15-29-6070	A-8723-70A571	15-29-6170	A-8723-70B571	15-41-7070	A-8723-70A574	15-41-7170	A-8723-70B574		A-8723-70A596		A-8723-70B596				
72	15-42-6072	A-8723-72A164	15-42-6172	A-8723-72B164	15-29-6072	A-8723-72A571	15-29-6172	A-8723-72B571	15-41-7072	A-8723-72A574	15-41-7172	A-8723-72B574		A-8723-72A596		A-8723-72B596				

LTR.	REVISIONS	LTR.	REVISIONS
		T	SEE SHEET 1
		O	SEE SHEET 1
		N	SEE SHEET 1

DIMENSIONS SHOWN (METRIC) INCH

UNLESS OTHERWISE SPECIFIED TOLERANCES: ANGULAR ± 1/2°

	INCH	METRIC
3 PLACE	±	
2 PLACE	±	±
1 PLACE		±

DRAFT WHERE APPLICABLE MUST REMAIN WITHIN DIMENSIONS

DRWG. BY RB | CHK'D. BY | APPD. BY | SCALE :

▽ = 0 ▼ = 0 REVISE ONLY ON CAD SYSTEM

TITLE SALES ASSEMBLY
WAFER-STRAIGHT MT. FULLY SHROUDED
.100 GRID-FOR USE W/.025 SQ. PINS
WITH .066 END WALLS

MOLEX INCORPORATED
LISLE, ILL. 60532 U.S.A.

SHEET NO. 2 | DATE 92/07/17

PART NO. SEE CHART | DRWG. NO. SDA-8723-******

FILE NAME 58723AX2

THIS DRAWING CONTAINS INFORMATION THAT IS PROPRIETARY TO MOLEX INC. AND SHOULD NOT BE USED WITHOUT WRITTEN PERMISSION.

QTY. DA | SIZE D