Chipsmall Limited consists of a professional team with an average of over 10 year of expertise in the distribution of electronic components. Based in Hongkong, we have already established firm and mutual-benefit business relationships with customers from,Europe,America and south Asia,supplying obsolete and hard-to-find components to meet their specific needs.

With the principle of “Quality Parts,Customers Priority,Honest Operation,and Considerate Service”,our business mainly focus on the distribution of electronic components. Line cards we deal with include Microchip,ALPS,ROHM,Xilinx,Pulse,ON,Everlight and Freescale. Main products comprise IC,Modules,Potentiometer,IC Socket,Relay,Connector.Our parts cover such applications as commercial,industrial, and automotives areas.

We are looking forward to setting up business relationship with you and hope to provide you with the best service and solution. Let us make a better world for our industry!

Contact us

Tel: +86-755-8981 8866 Fax: +86-755-8427 6832
Email & Skype: info@chipsmall.com Web: www.chipsmall.com
Address: A1208, Overseas Decoration Building, #122 Zhenhua RD., Futian, Shenzhen, China

78976

NOTES:
1. CARD SLOT ACCEPTS P.C. BOARDS .050 +.004/-.003 (1.27 +0.10/-0.08) THICK, MEASURED OVER CONTACT PADS.
2. LOCATION OF LOWER CORNER OF MODULE BOARD.
3. PRODUCT SPEC PS-78954 APPLIES.
4. CENTER PEG IS AN INTERFERENCE FIT TO RECOMMENDED P.C. BOARD HOLE.

MATERIALS:
HOUSING: LCP, GLASS FILLED, 94V-0. COLOR: BLACK.
LATCH: STAINLESS STEEL.
TERMINAL: PHOSPHOR BRONZE, POST PLATED
200 µin./(5.08 µm) MINIMUM TIN IN CONTACT AREA AND 150 µin./(3.81µm) MINIMUM TIN IN TAIL AREA OVER 50 µin./(1.27 µm) MINIMUM NICKEL OVERALL.

THE PRIMARY SHIPPING CARTON WILL BE LABELED "COMPLIANT TO RoHS DIRECTIVE 2002/95/EC AND ELV ANNEX II OF DIRECTIVE 2000/53/EC". CARTONS WITHOUT THIS LABEL MAY CONTAIN PRODUCT WITH LEAD.

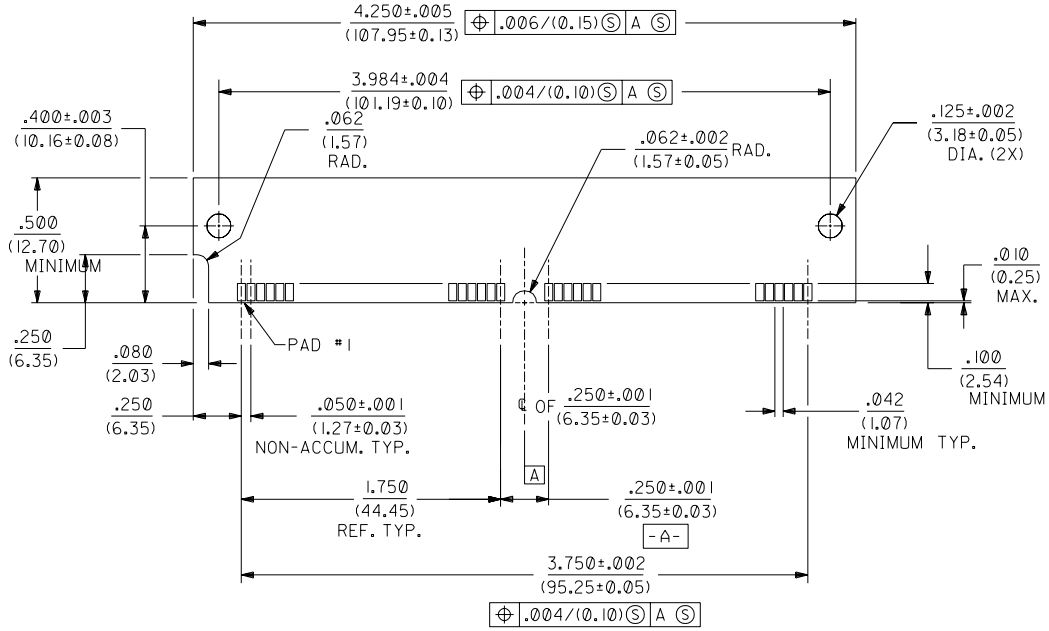

"SIMM" P.C. BOARD LAYOUT

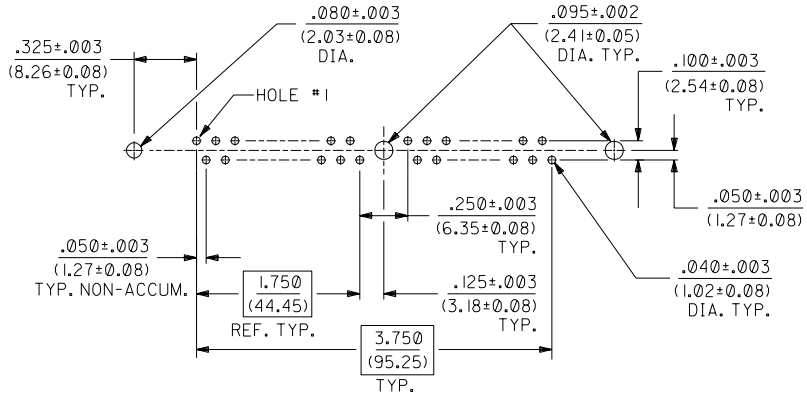

RECOMMENDED SOCKET
P.C. BOARD HOLE PATTERN

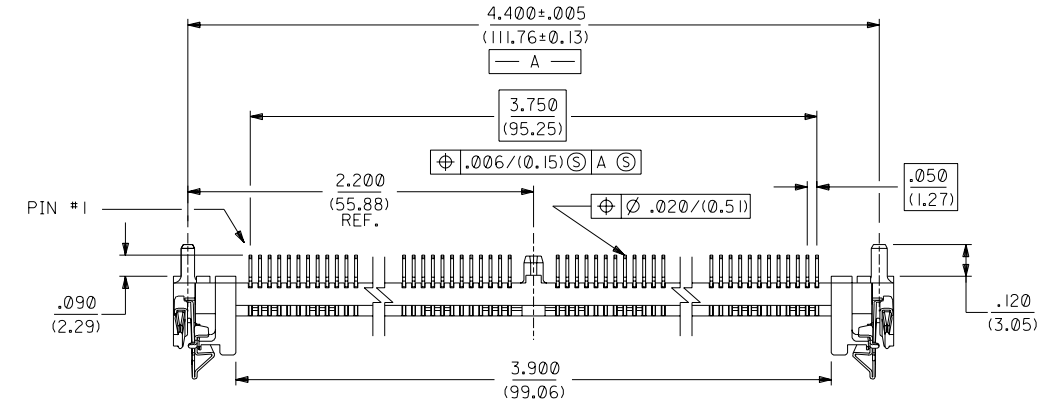

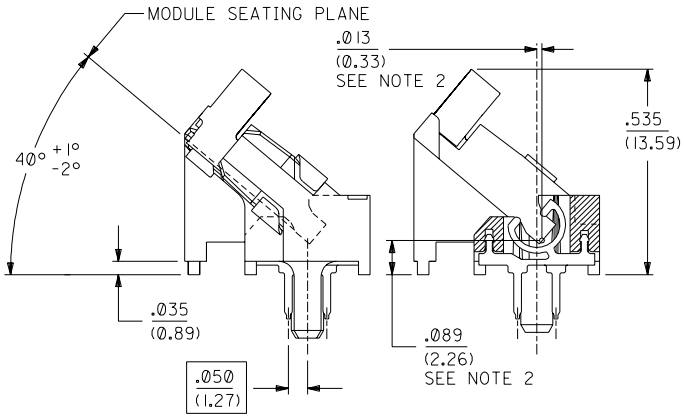

END VIEW SCALE 4:1

SECTION A-A SCALE 4:1

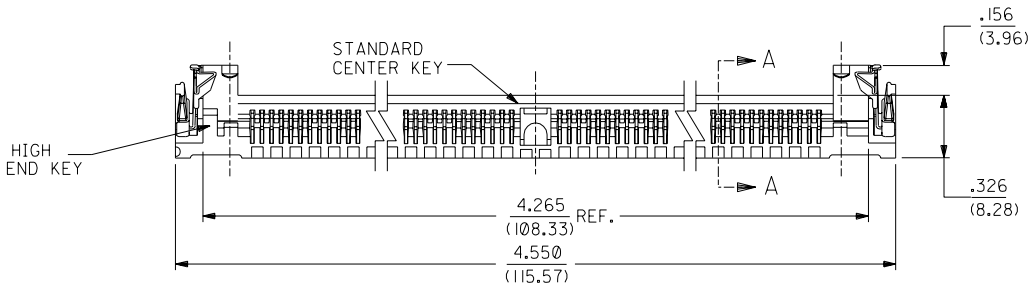

LTR.	REVISIONS
C	LEAD FREE UCP2004-1582 RWHITE 04/03/03
B	REVISED PER ECN# U51393 GMY 7-25-95
A	RELEASE PER ECN #U50845 DKS 2-23-95

MFG. | SH. | REV.

REVISE ONLY ON CAD SYSTEM

DIMENSIONS SHOWN (METRIC) INCH

UNLESS OTHERWISE SPECIFIED TOLERANCES: ANGULAR ± 1/2°

		INCH	METRIC
3 PLACE	±	.010	---
2 PLACE	±	.014	± 0.25
1 PLACE		---	± 0.36

DRAFT WHERE APPLICABLE MUST REMAIN WITHIN DIMENSIONS

TITLE: SALES ASSY. 72 CIRCUIT 40° METAL LATCH HIGH KEY SINGLE ROW SIMM SOCKET

MOLEX INCORPORATED LISLE, ILL. 60532 U.S.A.

SHEET NO. 1 OF 1 | DATE 02/23/95

PART NO. 15-82-0649 | DRWG. NO. SDA-78976-7246

DRWG. BY DKS | CHK'D. BY | APP'D. BY | SCALE 2:1

FILE NAME S78976-46 DON

THIS DRAWING CONTAINS INFORMATION THAT IS PROPRIETARY TO MOLEX INC. AND SHOULD NOT BE USED WITHOUT WRITTEN PERMISSION.

DIV. DA | SIZE C

78976