Chipsmall Limited consists of a professional team with an average of over 10 year of expertise in the distribution of electronic components. Based in Hongkong, we have already established firm and mutual-benefit business relationships with customers from,Europe,America and south Asia,supplying obsolete and hard-to-find components to meet their specific needs.

With the principle of “Quality Parts,Customers Priority,Honest Operation,and Considerate Service”,our business mainly focus on the distribution of electronic components. Line cards we deal with include Microchip,ALPS,ROHM,Xilinx,Pulse,ON,Everlight and Freescale. Main products comprise IC,Modules,Potentiometer,IC Socket,Relay,Connector.Our parts cover such applications as commercial,industrial, and automotives areas.

We are looking forward to setting up business relationship with you and hope to provide you with the best service and solution. Let us make a better world for our industry!

Contact us

Tel: +86-755-8981 8866 Fax: +86-755-8427 6832
Email & Skype: info@chipsmall.com Web: www.chipsmall.com
Address: A1208, Overseas Decoration Building, #122 Zhenhua RD., Futian, Shenzhen, China

NOTES:
1. CARD SLOT ACCEPTS P.C. BOARDS .050 +.004/-.003 (1.27 +0.10/-0.08) THICK, MEASURED OVER CONTACT PADS.
2. PRODUCT SPEC PS-78954 APPLIES.
3. LOCATION OF LOWER CORNER OF MODULE BOARD.
4. CENTER PEG IS AN INTERFERENCE FIT TO RECOMMENDED P.C. BOARD HOLE.

MATERIALS:
HOUSING: LCP, GLASS FILLED, 94V-0. COLOR: BLACK.
LATCH: STAINLESS STEEL.
TERMINAL: PHOSPHOR BRONZE, POST PLATED
200 μIN./(5.08μm) MIN. TIN IN CONTACT AREA AND
150 μIN./(3.81μm) MIN. TIN IN TAIL AREA OVER
50 μIN./(1.27μm) MIN. NICKEL OVERALL.

*THE PRIMARY SHIPPING CARTON WILL BE LABELED "COMPLIANT TO RoHS DIRECTIVE 2002/95/EC AND ELV ANNEX II OF DIRECTIVE 2000/53/EC". CARTONS WITHOUT THIS LABEL MAY CONTAIN PRODUCT WITH LEAD.

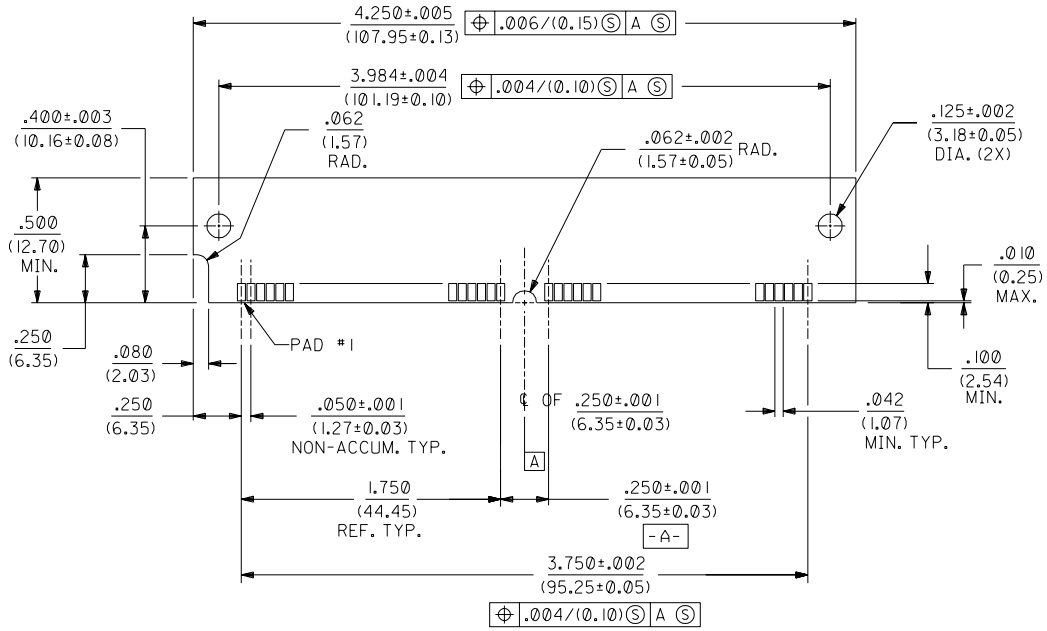

"SIMM" P.C. BOARD LAYOUT

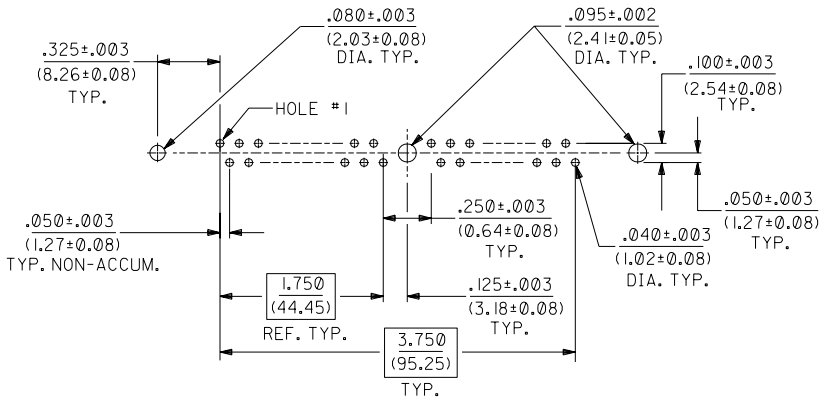

RECOMMENDED SOCKET
P.C. BOARD HOLE PATTERN

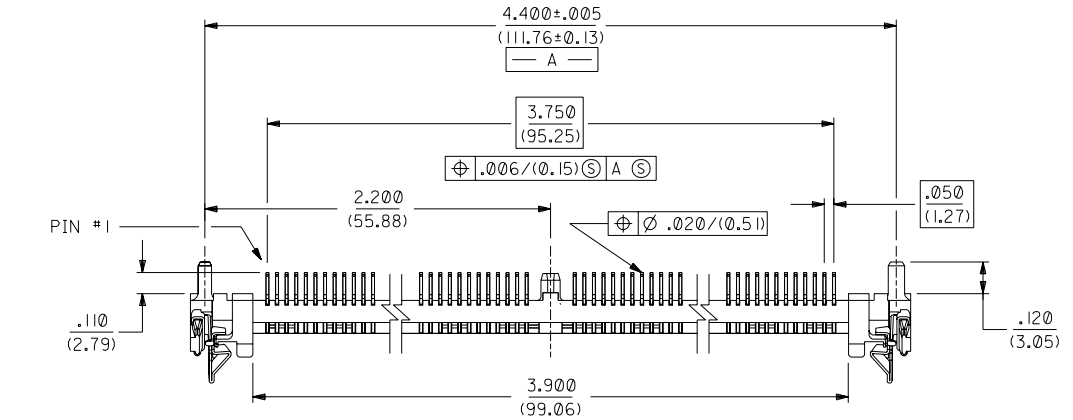

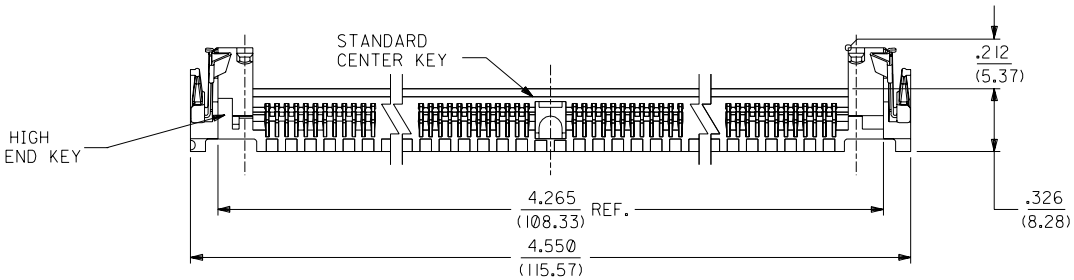

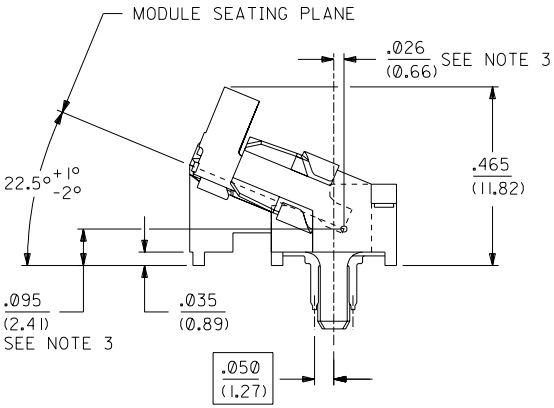

END VIEW
SCALE 4:1

LTR.	REVISIONS
H	LEAD FREE UCP2004-1582 RWHITE 04/02/25
G	REVISED PER ECN #U51394 GMY 7-18-95
F	REVISED PEG LENGTH PER ECR#U30751 MJS 6-8-93
E	DEL. FEATURE CONTROL BLOCK PER ECN U21881 PDB 12-28-92
D	.010 BLOCK TOL. WAS .050 PER ECN U21290 PDB 08-27-92
C	REMOVED TRACKING TOES PER ECN #U20914 PDB 06-17-92
B	REVISED SALES MASTER PER ECN #U11871 PDB 09-10-91
A	RELEASE PER ECN #U10303 PDB 01-18-91

MFG. SH. REV. LTR. REVISIONS

DIMENSIONS SHOWN (METRIC) INCH
UNLESS OTHERWISE SPECIFIED TOLERANCES: ANGULAR ± 1/2°

	INCH	METRIC
3 PLACE	± .010	---
2 PLACE	± .014	± 0.25
1 PLACE	---	± 0.36

DRAFT WHERE APPLICABLE MUST REMAIN WITHIN DIMENSIONS

DRWG. BY PDB | CHK'D. BY | APP'D. BY | SCALE 2:1

REVISE ONLY ON CAD SYSTEM

TITLE
SALES ASSEMBLY
22.5 METAL LATCH HIGH KEY
SINGLE ROW SIMM SOCKET

molex MOLEX INCORPORATED LISLE, ILL. 60532 U.S.A.
SHEET NO. 1 OF 1 | DATE 01/18/91
PART NO. 15-82-0678 | DRWG. NO. SDA-78964-7231
FILE NAME S7896430 DGN

THIS DRAWING CONTAINS INFORMATION THAT IS PROPRIETARY TO MOLEX INC. AND SHOULD NOT BE USED WITHOUT WRITTEN PERMISSION.

DIV. | SIZE C

78964